REMOTE REFRIGERATION SYSTEM CONDENSING UNITS. REFER TO ARCHITECTURAL DRAWINGS FOR EXACT ROOF TOP LOCATION.

DRY STORES 124

WOMEN'S LOCKER 125

ST 126

ES 104

KIT EP 127

MEN'S LOCKER 128

B

ST 129

DIETARY ENTRY 110

DIETARY OFFICE 111

ITEM 96 REMOTE PORT

SNACK PREP 112

ITEM 7 LOW WALL CAPS

PRODUCTION 113

FREEZER 119

MEAT/DAIRY & THAW COOLER 120

PRODUCE COOLER XXX

TRAY ASSEMBLY 121

FINISHING COOLER 117

CART STAGING 118

RETHERM DOCKING 122

KITCHEN DOCK

CART WASH 115

SANITATION 114

1 FIRST FLOOR - FOOD SERVICE EQUIPMENT PLAN
Scale: 1/4" = 1'-0"

9/19/2017 2:38:39 PM D:_RevitWSH_Arch_cjacobs@nacarchitecture.com.rvt

REVISIONS

CONFORMED SET

HALLIDAY ASSOCIATES
656 NW NORWOOD
CAMAS, WASH. 98607
360 - 834 - 6857
FAX 360 - 834 - 5453
FOOD FACILITY CONSULTANTS
SPACE PLANNING + DESIGN

Western State Hospital
BUILDING 22, PATIENT SUPPORT CENTER
PATIENT SUPPORT CENTER
9601 STEILACOOM BLVD SW, LAKEWOOD, WASHINGTON 98498-7213

NAC ARCHITECTURE
nacarchitecture.com
2025 FIRST AVE | SUITE 300
SEATTLE WA 98121
P:206.441.4522

© 2016 NAC Inc

DSHS NO	2016-410G(2-1)
NAC NO	121-16004
DRAWN	LB/SH
CHECKED	LB
DATE	03/16/2018

FIRST FLOOR FOOD SERVICE EQUIPMENT PLAN

FS1.01

EQUIPMENT SCHEDULE

ITEM	DESCRIPTION	QUAN.	REMARKS:
1	WALK-IN COLD STORAGE ROOMS	2	---
2	REFRIGERATION SYSTEMS	7	INCLUDES 3 SYSTEMS FOR ITEM 80 BLAST CHILLERS
3	WALK-IN KITCHEN FREEZER SHELVING	LOT	OWNER FURNISHED AND INSTALLED
4	WALK-IN COOLER DUNNAGE RACKS	4	OWNER FURNISHED AND INSTALLED
5	WALK-IN THAW ROOM SHELVING	LOT	OWNER FURNISHED AND INSTALLED
6	MOBILE QUEEN MARY SHELVING	30	(7) EXISTING EQUIPMENT
7	CORNER/CHANNEL GUARDS	LOT	---
8	NOT USED	---	---
9	NOT USED	---	---
10	WALK-IN PRODUCE COOLER SHELVING	LOT	OWNER FURNISHED AND INSTALLED
11	WALK-IN COLD STORAGE ROOMS	2	---
12	NOT USED	---	---
13	NOT USED	---	---
14	NOT USED	---	---
15	DRY STORAGE DUNNAGE RACKS	6	OWNER FURNISHED AND INSTALLED
16	KITCHEN DRY STORAGE SHELVING	LOT	OWNER FURNISHED AND INSTALLED
17	PIZZA PREP-TOP REFRIGERATOR	1	EXISTING EQUIPMENT- RELOCATE & REINSTALL
18	SNACK TRANSPORT CARTS	30	EXISTING EQUIPMENT- RELOCATE & REINSTALL
19	GLASS DOOR REFRIGERATOR	1	EXISTING EQUIPMENT- RELOCATE & REINSTALL
20	GLASS DOOR FREEZER	1	EXISTING EQUIPMENT- RELOCATE & REINSTALL
21	REACH-IN DUAL TEMP REFRIGERATOR/FREEZER	1	EXISTING EQUIPMENT- RELOCATE & REINSTALL
22	REACH-IN DUAL TEMP REFRIGERATOR/FREEZER	1	EXISTING EQUIPMENT- RELOCATE & REINSTALL
23	REACH-IN FREEZER	1	EXISTING EQUIPMENT- RELOCATE & REINSTALL
24	SLIM JIMS	7	OWNER FURNISHED AND INSTALLED
25	HAND WASHING SINKS	7	---
26	CUBE ICE MACHINE WITH STORAGE BIN	1	EXISTING EQUIPMENT- RELOCATE & REINSTALL
27	SUPPORT TABLE WITH SINK	1	---
28	NOT USED	---	---
29	NOT USED	---	---
30	STAFF COMPUTER WORK STATION	LOT	OWNER FURNISHED & INSTALLED
31	VEGETABLE PREPARATION SINK TABLE	1	---
32	VEGETABLE PREPARATION SINK TABLE	1	---
33	FOOD PROCESSOR	1	EXISTING EQUIPMENT- RELOCATE & REINSTALL
34	MOBILE ISLAND WORK TABLE	1	---
35	UTILITY CARTS	6	OWNER FURNISHED AND INSTALLED
36	MOBILE SLICER CARTS	2	OWNER FURNISHED AND INSTALLED
37	SLICERS	2	EXISTING EQUIPMENT- RELOCATE & REINSTALL
38	SPEED RACKS	8	OWNER FURNISHED AND INSTALLED
39	MOBILE ISLAND WORK TABLES	2	---
40	MEAT CUTTER	1	EXISTING EQUIPMENT- RELOCATE & REINSTALL
41	FOOD CUTTER	1	EXISTING EQUIPMENT- RELOCATE & REINSTALL
42	MOBILE FOOD CUTTER CART	1	OWNER FURNISHED AND INSTALLED
43	NOT USED	---	---
44	MAPLE TOP BAKER'S TABLE	1	---
45	PREP TOP REFRIGERATOR	1	---
46	ISLAND WORK TABLE	1	---
47	NOT USED	---	---
48	NOT USED	--	---
49	80-QUART MIXER	1	---
50	FILL FAUCET	1	---
51	SUPPORT TABLE WITH SINK	1	---
52	FOOD PROCESSOR	1	EXISTING EQUIPMENT- RELOCATE & REINSTALL
53	MEAT PREP SINK TABLE	1	---
54	CANOPY HOOD WITH FIRE PROTECTION SYSTEM	1	---
55	STAINLESS STEEL WALL FLASHING	LOT	---
56	GRIDDLES WITH STANDS	2	---
57	FLOOR TROUGHS	3	---
58	40-GALLON TILTING SKILLETS	2	---
59	FRENCH PLATE/FRY TOP RANGE	1	---
60	DOUBLE STACK CONVECTION STEAMERS	1	EXISTING EQUIPMENT- RELOCATE & REINSTALL
61	DOUBLE-STACK CONVECTION OVENS	1	---
62	COOK'S SUPPORT TABLE	1	---
63	BLENDER	1	EXISTING EQUIPMENT- RELOCATE & REINSTALL
64	REACH-IN REFRIGERATOR	1	OWNER FURNISHED AND INSTALLED
65	MOBILE WORK TABLES	2	---
66	MOBILE ISLAND WORK TABLE	1	---
67	FLOOR TROUGHS	2	---
68	MOBILE ISLAND WORK TABLE	1	---
69	VEGETABLE CUTTER/SLICER	1	EXISTING EQUIPMENT- RELOCATE & REINSTALL
70	ROLL-IN RACK OVEN WITH FIRE PROTECTION SYSTEM	1	---
71	MOBILE OVEN RACKS	8	---
72	CANOPY HOOD WITH FIRE PROTECTION SYSTEM	1	---
73	STAINLESS WALL FLASHING	LOT	---
74	DOUBLE-STACK CONVECTION OVENS	3	EXISTING EQUIPMENT- RELOCATE & REINSTALL
75	ROLL-IN COMBI-OVEN STEAMERS	2	---
76	TWO 6-GALLON TILTING KETTLES WITH STAND	1	---
77	100-GALLON STATIONARY KETTLES	2	---
78	100-GALLON COOKER/MIXER KETTLE	1	WITH PUMP FILL STATION
79	BLAST CHILL RACKS	40	OWNER FURNISHED AND INSTALLED
80	ROLL-IN BLAST CHILLERS	4	(1) IS FUTURE EQUIPMENT
81	BEVERAGE TABLE	1	---
82	SODA DISPENSER	1	BY VENDOR
83	MEAL TRANSPORT CARTS	32	OWNER FURNISHED AND INSTALLED
83	MEAL TRANSPORT CARTS	32	OWNER FURNISHED AND INSTALLED - WSH-OB
84A	TRAY LINE MOBILE STARTER TABLES	4	---
84B	TRAY LINE COLD DISH-UP WELLS	4	---
84C	TRAY LINE TRAY LOWERATOR CARTS	4	---
84D	TRAY LINE SLIDER TABLES	16	---
84E	TRAY LINE MOBILE GRAB 'N GO SHELVING	12	---
85	CANOPY HOOD WITH FIRE PROTECTION SYSTEM	1	---
86	TRAY CART DOCKING STATIONS	18	OWNER FURNISHED AND INSTALLED
87	SECURE CHEMICAL STORAGE SHELVING	LOT	OWNER FURNISHED AND INSTALLED
88	NOT USED	---	---
89	POTWASHING SOILED DISHTABLE	1	EXISTING EQUIPMENT- RELOCATE & REINSTALL
90	VAPOR EXHAUST DUCTS	2	EXISTING EQUIPMENT- RELOCATE & REINSTALL
91	POT/PAN WASHER & BOOSTER HEATER	1	---
92	BLOWER/DRYER	1	EXISTING EQUIPMENT- RELOCATE & REINSTALL
93	CLEAN DISHTABLE	1	EXISTING EQUIPMENT- RELOCATE & REINSTALL
94	NOT USED	---	---
95	EYE WASH STATION	1	SPECIFIED BY PLUMBING DIVISION
96	HIGH PRESSURE WASH SYSTEM	1	WITH FOUR (4) REMOTE PORTS
97	MOBILE WASTE RECEPTACLES	10	OWNER FURNISHED AND INSTALLED

EQUIPMENT SCHEDULE

ITEM	DESCRIPTION	QUAN.	REMARKS:
98	TROUGH WASTE COLLECTOR	1	---
99	MOBILE DISH CARTS	2	OWNER FURNISHED AND INSTALLED
100	FLOOR TROUGHS	3	---
101	VAPOR EXHAUST DUCTS	2	---
102	OVAL WAREWASHER WITH DISHTABLES	1	---
103	MOBILE TRAY DRYING RACKS	3	OWNER FURNISHED AND INSTALLED
104	DEHYDRATOR	1	FUTURE EQUIPMENT
105	NOT USED	---	---
106	HOSE REEL	1	---
107	AIR CURTAINS	2	---
108	NOT USED	---	---
109	NOT USED	---	---

1 FIRST FLOOR - FOOD SERVICE EQUIPMENT SCHEDULE
Scale: NONE

REVISIONS

CONFORMED SET

HALLIDAY ASSOCIATES
636 NW NORWOOD CANAL, WASH. 98607
360 - 834 - 6857
FAX 360 - 834 - 5435
FOOD FACILITY CONSULTANTS SPACE PLANNING & DESIGN

Western State Hospital
BUILDING 22, PATIENT SUPPORT CENTER
PATIENT SUPPORT CENTER
9601 STEILACOOM BLVD SW, LAKEWOOD, WASHINGTON 98498-7213

NAC ARCHITECTURE
nacarchitecture.com
2025 FIRST AVE | SUITE 300
SEATTLE WA 98121
P:206.441.4522

© 2016 NAC INC

DSHS NO 2016-410G(2-1)
NAC NO 121-16004
DRAWN LB/SH
CHECKED LB
DATE 03/16/2018

FIRST FLOOR FOOD SERVICE EQUIPMENT SCHEDULE

FS1.01S

MOBILE KITCHEN

DRY STORES 124

WOMEN'S LOCKER 125

ST 126

ES 104

KITCHEN 127

MEN'S LOCKER 128

ST 129

B

DIETARY ENTRY 110

DIETARY OFFICE 111

DETECTION LINE

SUPPLY #1 SUPPLY #2 SUPPLY #3

INTERCONNECT WITH HOODS 54, 72, & 85 (P16). SEE HALTON HOODS DRAWINGS FOR ALL REQUIREMENTS

3/8" INSULATED BEVERAGE TUBING RUN ABOVE CEILING & DOWN WALLS TO (4) REMOTE PRESSURE WASH PORTS.

FREEZER 119

MEAT/DAIRY & THAW COOLER

PRODUCTION 113

TRAY ASSEMBLY 121

FINISHING COOLER 117

CART STAGING 118

SANITATION 114

CART WASH 115

RETHERM DOCKING 122

TALL MEAL DELIVERY CART

PLUMBING SYMBOL LEGEND	
COLD WATER	C
HOT WATER	H
WASTE	W
FLOOR DRAIN	FD
FLOOR SINK	FS
STEAM INLET	SI
STEAM RETURN	SR
COMPRESSED AIR	A

1 FIRST FLOOR - FOOD SERVICE PLUMBING PLAN
Scale: 1/4" = 1'-0"

9/19/2017 2:38:39 PM D:_Revit\WSH_Arch_cjacobs@nacarchitecture.com.rvt

REVISIONS

CONFORMED SET

HALLIDAY ASSOCIATES
656 NW NORWOOD CANAL, WASH. 98607
360 . 834 . 6857
FAX 360 . 834 . 5435
FOOD FACILITY CONSULTANTS SPACE PLANNING & DESIGN

Western State Hospital
BUILDING 22, PATIENT SUPPORT CENTER
PATIENT SUPPORT CENTER
9601 STEILACOOM BLVD SW, LAKEWOOD, WASHINGTON 98498-7213

NAC ARCHITECTURE
nacarchitecture.com
2025 FIRST AVE | SUITE 300
SEATTLE WA 98121
P:206.441.4522

© 2016 NAC Inc

DSHS NO	2016-410G(2-1)
NAC NO	121-16004
DRAWN	LB/SH
CHECKED	LB
DATE	03/16/2018

FIRST FLOOR FOOD SERVICE PLUMBING PLAN

FS1.02

PLUMBING NOTES

1. THIS DRAWING IS NOT TO BE USED FOR ESTABLISHING ROUGH-IN LOCATIONS. REFER TO DIMENSIONED DRAWING PREPARED BY THE KITCHEN EQUIPMENT CONTRACTOR.
2. UNDER PLUMBING WORK OF DIVISION 22, MAKE ALL ROUGH-INS AND FINAL CONNECTIONS IN CONFORMANCE WITH LOCAL CODES. PROVIDE SHUT-OFF VALVES WITH PERMANENT NAME TAGS IDENTIFYING SUPPLY LINES TO EACH INDIVIDUAL PIECE OF EQUIPMENT. INCLUDE TRAPS, TAIL PIECES, AND LINE STRAINERS AS REQUIRED.
3. UNDER PLUMBING WORK OF DIVISION 22, FURNISH AND INSTALL ALL FLOOR SINKS AND AREA DRAINS FLUSH WITH FINISHED FLOOR IF CODE ALLOWS.
4. UNDER PLUMBING WORK OF DIVISION 22, FURNISH AND INSTALL GREASE TRAP OR INTERCEPTOR AS REQUIRED.
5. UNDER PLUMBING WORK OF DIVISION 22, FURNISH AND INSTALL ALL SINK WASTE LINES. USE COPPER TUBING UNEXPOSED AND PAINTED WHERE LINES ARE VISIBLE. NO PVC PIPING IS ACCEPTABLE.
6. UNDER KITCHEN EQUIPMENT WORK OF DIVISION 11, PROVIDE FAUCETS AT EQUIPMENT. UNDER PLUMBING WORK OF DIVISION 22, INSTALL AND CONNECT FAUCETS.
7. UNDER PLUMBING WORK OF DIVISION 22, FURNISH AND INSTALL CHROME PLATED VACUUM BREAKERS OR BACKSYPHONING DEVICES ON SUPPLY LINES TO EQUIPMENT AS REQUIRED BY CODES.
8. UNDER PLUMBING WORK OF DIVISION 22, FURNISH AND INSTALL STAINLESS STEEL OR CHROME PLATED ESCUTCHEON PLATES FOR ALL WATER LINES PENETRATING COUNTER TOPS AND BACK SPLASHES.
9. UNDER PLUMBING WORK OF DIVISION 22, FURNISH PRESSURE REDUCING VALVE FOR ALL STEAM, AND WATER LINES. MAXIMUM WATER PRESSURE AT BOOSTER HEATER AND DISHWASHER SHALL BE 20 PSI.
10. UNDER KITCHEN EQUIPMENT WORK OF DIVISION 11, FURNISH AND INSTALL WALK-IN COLD STORAGE ROOM EVAPORATOR COPPER DRAIN LINES. TRAP AT OUTLET END.
11. UNDER PLUMBING WORK OF DIVISION 22, PROVIDE 140 DEGREE HOT WATER SUPPLY AT WAREWASHER/ BOOSTER HEATER AND HOSE REEL AS SHOWN. VERIFY REQUIRED TEMPERATURE FOR SUPPLY AT SINK FAUCETS WITH LOCAL AND NATIONAL CODES.
12. SEE PLUMBING AND MECHANICAL DRAWINGS FOR ADDITIONAL REQUIREMENTS.

PLUMBING SCHEDULE

ITEM NO.	P. NO.	SIZE	DESCRIPTION	LOCATION	HEIGHT	SERVICE TO :	REMARKS:
---	P1	---	FLOOR DRAIN	FLOOR	-1/2"	AREA DRAIN	---
27	P2	12" x 12"	FLOOR SINK	FLOOR	Ø"	(1) SINK DRAIN	NO GRATE
26	P3	1/2"	COLD	FIXTURE	60"	CUBE ICE MACHINE WITH BIN	---
2, 26	P4	12" x 12"	FLOOR SINK	FLOOR	Ø"	EVAPORATOR & CUBE ICE MACHINE WITH BIN	HALF GRATE
27	P5	1/2"	HOT & COLD	WALL	16"	SINK FAUCET	20 GPH HOT
31, 32	P6	1/2"	HOT & COLD	WALL	16"	SINK FAUCETS	20 GPH HOT
31, 32	P7	12" x 12"	FLOOR SINK	FLOOR	Ø"	(3) SINK DRAINS	NO GRATE
25	P8	1/2"	HOT & COLD	WALL	22"	HAND WASHING SINK	20 GPH HOT
25	P9	1-1/2"	WASTE	WALL	20"	HAND WASHING SINK	---
96	P10	3/8"	S.S. TUBING	WALL	48"	HIGH PRESSURE WASH SYSTEM (REMOTE STATION)	BEVERAGE TUBING - RUN ACROSS CEILING FROM BASE UNIT. VERIFY ALL LOCATIONS
50	P11	1/2"	HOT & COLD	WALL	54"	FILL FAUCET	20 GPH HOT
51, 53	P12	1/2"	HOT & COLD	WALL	16"	SINK FAUCET	20 GPH HOT
51	P13	12" x 12"	FLOOR SINK	FLOOR	Ø"	(1) SINK DRAIN	NO GRATE
53	P14	12" x 12"	FLOOR SINK	FLOOR	Ø"	(2) SINK DRAINS	NO GRATE
54, 72, 85	P15	1"	COLD	WALL	102"	HOOD FIRE PROTECTION SYSTEM	19 PSI MIN. / 100 PSI MAX. INTERCONNECT WITH P16
54, 72, 85	P16	---	---	CEILING	---	HOOD FIRE PROTECTION SYSTEM	SUPPLY FROM P15
70	P17	---	FLOOR DRAIN	FLOOR	-1/2"	ROLL-IN RACK OVEN	---
57, 67	P18	3"	TROUGH DRAIN	FLOOR	-4 1/2""	FLOOR TROUGH	CONNECT TO GREASE INTERCEPTOR
70	P19	1/2"	COLD	WALL	90"	ROLL-IN RACK OVEN	---
60	P20	12" x 12"	FLOOR SINK	FLOOR	Ø"	CONVECTION STEAMER	THREE-QUARTER GRATE
60	P21	3/4"	COLD	WALL	22"	CONVECTION STEAMER	DO NOT RUN THRU WATER FILTRATION SYSTEM
75	P22	12" x 12"	FLOOR SINK	FLOOR	Ø"	ROLL-IN COMBI-OVEN STEAMER	HALF GRATE
75	P23	3/4"	COLD	WALL	70"	ROLL-IN COMBI-OVEN STEAMER	FOR CONDENSER
75	P24	3/4"	COLD	WALL	70"	ROLL-IN COMBI-OVEN STEAMER	FOR BOILER - SUPPLY FROM P26
---	P25	---	NOT USED	---	---	---	---
---	P26	1/2"	COLD	WALL	56"	WATER FILTRATION SYSTEM	INTERCONNECT WITH EACH ROLL-IN COMBI-OVEN STEAMER (P24)
58, 76	P27	1/2"	HOT & COLD	WALL	13"	FILL FAUCET	20 GPH HOT. VERIFY REQUIREMENTS WITH EXISTING EQUIPMENT
---	P28	---	NOT USED	---	---	---	---
76, 78	P29	12" x 12"	FLOOR SINK	FLOOR	Ø"	TILTING KETTLES STAND & 100-GALLON AGITATOR KETTLE	HALF GRATE
---	P30	---	NOT USED	---	---	---	---
78	P31	3/4"	COLD	WALL	24"	100-GALLON AGITATOR KETTLE	15 GPM COOLING WATER
78	P32	1/4"	COMP. AIR	CEILING	VERIFY	100-GALLON AGITATOR KETTLE	1 CFM @ 80-90 PSI (CEILING DROP)
---	P33	---	NOT USED	---	---	---	---
78	P34	3/4"	HOT & COLD	WALL	45"	100-GALLON COOKER/MIXER KETTLE DOUBLE-PANTRY FILL FAUCET	50 GPH HOT
---	P35	---	NOT USED	---	---	---	---
77	P36	3/4"	HOT & COLD	WALL	48"	FILL FAUCET	50 GPH HOT
---	P37	---	NOT USED	---	---	---	---
80	P38	12" x 12"	FLOOR SINK	FLOOR	Ø"	ROLL-IN BLAST CHILLER	HALF GRATE
2, 82	P39	12" x 12"	FLOOR SINK	FLOOR	Ø"	WALK-IN EVAPORATOR DRAINS & SODA/ICE MACHINE	NO GRATE
82	P40	1/2"	COLD	WALL	72"	ICE MACHINE	TEE TO SODA DISPENSER
96	P41	3/4"	HOT @ 140°	WALL	12"	HIGH PRESSURE WASH SYSTEM (BASE UNIT)	HOSE BIB WITH SHUT-OFF. 5 GPH @ 30 PSI MINIMUM
---	P42	---	NOT USED	---	---	---	---
---	P43	---	NOT USED	---	---	---	---
89	P44	1/2"	HOT & COLD	WALL	18"	PRE-RINSE	40 GPH HOT
89	P45	2"	WASTE	WALL	14"	(3) SINK DRAINS	CONNECT TO GREASE INTERCEPTOR
---	P46	---	NOT USED	---	---	---	---
---	P47	---	NOT USED	---	---	---	---
91	P48	1/2"	HOT @ 140°F	WALL	12"	POT & PAN WASHER	132 GPH
91	P49	1/2"	COLD	WALL	14"	POT & PAN WASHER	---
91, 92	P50	12" x 12"	FLOOR SINK	FLOOR	Ø"	POT & PAN WASHER & BOOSTER HEATER	NO GRATE
92	P51	3/4"	HOT @ 140°F	WALL	17"	BOOSTER HEATER	---
"""	P52	"""	NOT USED	"""	"""	"""	---
"""	P53	"""	NOT USED	"""	"""	"""	---
"""	P54	"""	NOT USED	"""	"""	"""	"""
"""	P55	"""	NOT USED	"""	"""	"""	"""
---	P56	---	NOT USED	---	---	---	---
---	P57	---	NOT USED	---	---	---	---
---	P58	---	NOT USED	---	---	---	---
100	P59	3"	TROUGH DRAIN	FLOOR	-4 1/2""	FLOOR TROUGH	CONNECT TO GREASE INTERCEPTOR
102	P60	2"	WASTE	FLOOR	14"	DISHTABLE MOUNT HAND WASHING SINK	---
102	P61	1/2"	HOT & COLD	FLOOR	20"	DISHTABLE MOUNT HAND WASHING SINK	10 GPH HOT
95	P62	----	HOT & COLD	WALL	---	EYE WASH STATION	REQUIREMENTS BY DIVISION 22
95	P63	---	WASTE	WALL	---	EYE WASH STATION	REQUIREMENTS BY DIVISION 22
98	P64	3/4"	HOT & COLD	FIXTURE	18"	WASTE COLLECTOR	50 GPH HOT
98	P65	2"	WASTE	FIXTURE	7"	WASTE COLLECTOR	---
106	P66	1/2"	HOT & COLD	WALL	78""	HOSE REEL WITH RECESSED CONTROL CABINET	40 GPH HOT
102	P67	3/4"	COLD	WALL	63"	WAREWASHER	---
102	P68	1"	HOT @ 140°	WALL	12"	WAREWASHER WITH BOOSTER HEATER	121 GPH HOT @ 20 PSI
---	P69	---	NOT USED	---	---	---	---
102	P70	12" x 12"	FLOOR SINK	FLOOR	Ø"	WAREWASHER	NO GRATE
---	P71	---	NOT USED	---	---	---	---
---	P72	---	NOT USED	---	---	---	---
---	P73	---	NOT USED	---	---	---	---
---	P74	---	NOT USED	---	---	---	---
REFER TO SHEET FS2.02 FOR PLUMBING P75 AND ON							

1 FIRST FLOOR - FOOD SERVICE PLUMBING SCHEDULE
Scale: NONE

9/19/2017 2:38:39 PM D:_Revit\WSH_Arch_cjacobs@nacarchitecture.com.rvt

REVISIONS

CONFORMED SET

HALLIDAY ASSOCIATES
636 NW WORKWOOD CAMAS, WASH. 98607
360.30.834.6657
FAX 360.30.834.5435
FOOD FACILITY CONSULTANTS SPACE PLANNING + DESIGN

Western State Hospital
BUILDING 22, PATIENT SUPPORT CENTER
PATIENT SUPPORT CENTER
9601 STEILACOOM BLVD SW, LAKEWOOD, WASHINGTON 98498-7213

NAC ARCHITECTURE
nacarchitecture.com
2025 FIRST AVE | SUITE 300
SEATTLE WA 98121
P:206.441.4522

© 2016 NAC Inc

DSHS NO	2016-410G(2-1)
NAC NO	121-16004
DRAWN	LB/SH
CHECKED	LB
DATE	03/16/2018

FIRST FLOOR FOOD SERVICE PLUMBING SCHEDULE

FS1.02S

MOBILE WORK UNIT

DRY STORES 124

WOMEN'S LOCKER 125

ST 126

ES 104

KIT EP 127

MEN'S LOCKER 128

B

ST 129

DIETARY ENTRY 110

DIETARY OFFICE 111

SNACK PREP 112

8-1/2" DEEP WALK-IN FLOOR DEPRESSION - REFER TO WALK-IN DETAILS ON SHEET FS2.01 & REFER TO STRUCTURAL DRAWINGS

FREEZER 119

MEAT/DAIRY & THAW COOLER

TRAY

FINISHING COOLER 117

PRODUCTION 113

4-1/2" DEEP FLOOR TROUGH DEPRESSIONS WITH 3" DIA. DRAINS. REFER TO STRUCTURAL DRAWINGS

4-1/2" DEEP FLOOR TROUGH DEPRESSIONS WITH 3" DIA. DRAINS. REFER TO STRUCTURAL DRAWINGS

M1 M2 M3 M4 M5 M6 M7 M8 M9 M10 M11 M12

CART STAGING 118

SANITATION 114

4-1/2" DEEP FLOOR TROUGH DEPRESSIONS WITH 3" DIA. DRAINS. REFER TO STRUCTURAL DRAWINGS

RETHERM DOCKING 120

CART WASH 115

14 15

KITCHEN DOCK

MECHANICAL NOTES

M1. ONE (1) 12" X 10" TYPE I EXHAUST DUCT CONNECTION AT CANOPY HOOD. 1437 CFM WITH Ø.22" STATIC PRESSURE AT DUCT COLLAR.

M2. ONE (1) 20" X 12" TYPE I EXHAUST DUCT CONNECTION AT CANOPY HOOD. 2873 CFM WITH Ø.44" STATIC PRESSURE AT DUCT COLLAR.

M3. ONE (1) 20" X 12" TYPE I EXHAUST DUCT CONNECTION AT CANOPY HOOD. 2777 CFM WITH Ø.41" STATIC PRESSURE AT DUCT COLLAR.

M4. ONE (1) 17" X 12" TYPE I EXHAUST DUCT CONNECTION AT CANOPY HOOD. 2511 CFM WITH Ø.40" STATIC PRESSURE AT DUCT COLLAR.

M5. ONE (1) 14" X 12" TYPE I EXHAUST DUCT CONNECTION AT CANOPY HOOD. 2010 CFM WITH Ø.46" STATIC PRESSURE AT DUCT COLLAR.

M6. ONE (1) 17" X 12" TYPE I EXHAUST DUCT CONNECTION AT CANOPY HOOD. 2503 CFM WITH Ø.46" STATIC PRESSURE AT DUCT COLLAR.

M7. ONE (1) 13" X 12" TYPE I EXHAUST DUCT CONNECTION AT CANOPY HOOD. 1880 CFM WITH Ø.40" STATIC PRESSURE AT DUCT COLLAR.

M8. ONE (1) 13" X 12" TYPE I EXHAUST DUCT CONNECTION AT CANOPY HOOD. 1858 CFM WITH Ø.39" STATIC PRESSURE AT DUCT COLLAR.

M9. ONE (1) 4" X 16" EXHAUST DUCT CONNECTION AT POT & PAN WASHER LOAD END. 200 CFM WITH .25" STATIC PRESSURE AT DUCT COLLAR.

M10. ONE (1) 4" X 16" EXHAUST DUCT CONNECTION AT POT & PAN WASHER UNLOAD END. 175 CFM WITH .25" STATIC PRESSURE AT DUCT COLLAR.

M11. ONE (1) 4" X 25" EXHAUST DUCT CONNECTION AT OVAL WAREWASHER LOAD END. 400 CFM WITH .25" STATIC PRESSURE AT DUCT COLLAR.

M12. ONE (1) 4" X 25" EXHAUST DUCT CONNECTION AT OVAL WAREWASHER UNLOAD END. 200 CFM WITH .25" STATIC PRESSURE AT DUCT COLLAR.

DEPRESS./MECHANICAL SYMBOL LEGEND

EXHAUST DUCT

FLOOR DEPRESSION

TROUGH ISOMETRIC

TYPICAL FLOOR TROUGH FLANGE TO BE FLUSH WITH FINISHED FLOOR

FLOOR TROUGH SECTION

1 FIRST FLOOR - FOOD SERVICE MECHANICAL/DEPRESSION PLAN
Scale: 1/4" = 1'-0"

9/19/2017 2:38:39 PM D:_Revit\WSH_Arch_cjacobs@nacarchitecture.com.rvt

REVISIONS

CONFORMED SET

HALLIDAY ASSOCIATES
656 NW NORWOOD
CAMAS, WASH. 98607
360 . 834 . 6657
FAX 360 . 834 . 5453
FOOD FACILITY DESIGN/LEAN SPACE PLANNING & DESIGN

FOODSERVICE CONSULTANTS SOCIETY INTERNATIONAL

Western State Hospital
BUILDING 22, PATIENT SUPPORT CENTER
PATIENT SUPPORT CENTER
9601 STEILACOOM BLVD SW, LAKEWOOD, WASHINGTON 98498-7213

NAC ARCHITECTURE
nacarchitecture.com
2025 FIRST AVE | SUITE 300
SEATTLE WA 98121
P:206.441.4522

© 2016 NAC Inc

DSHS NO	2016-410G(2-1)
NAC NO	121-16004
DRAWN	LB/SH
CHECKED	LB
DATE	03/16/2018

FIRST FLOOR FOOD SERVICE MECHANICAL/ DEPRESSION PLAN

FS1.03

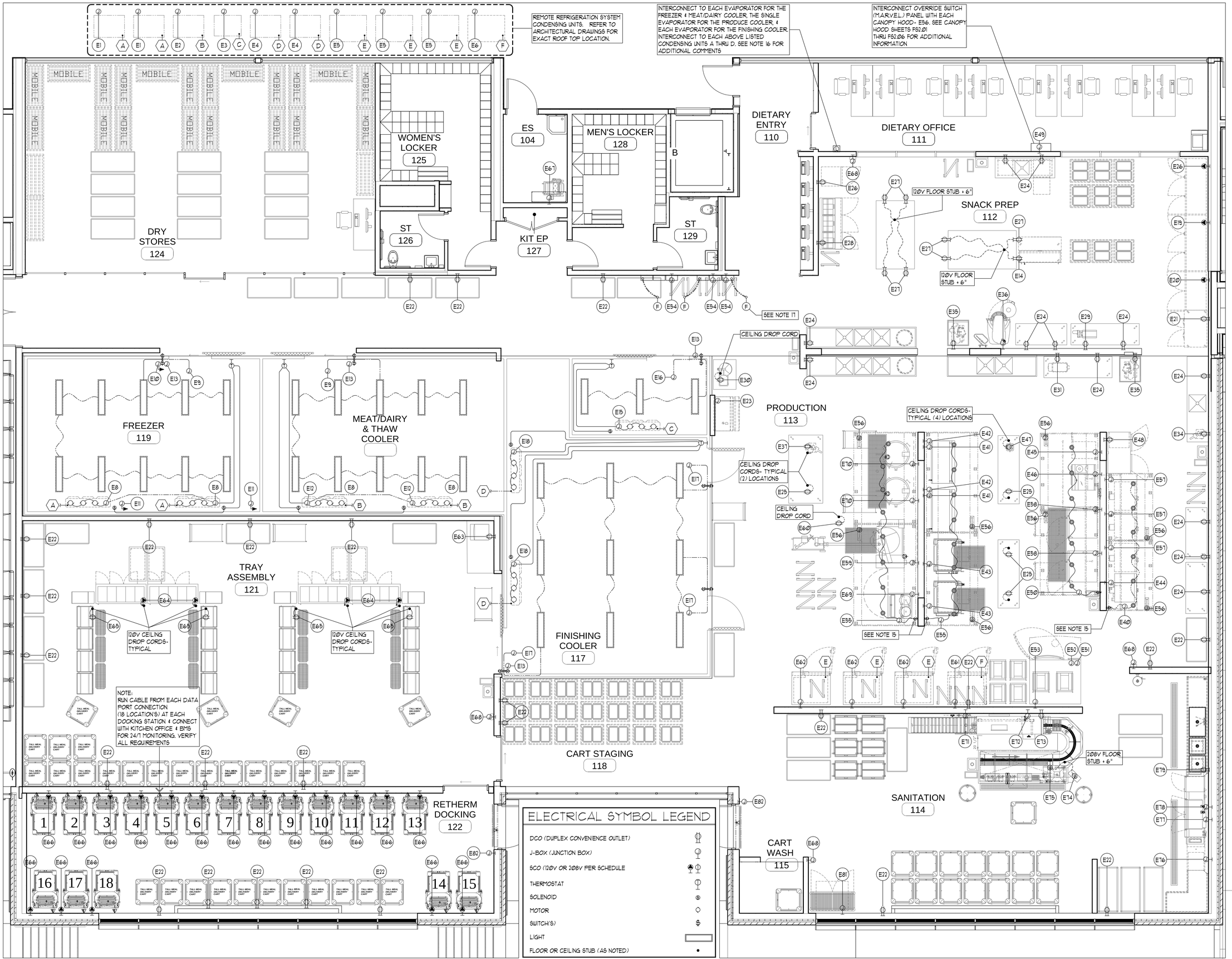

1 FIRST FLOOR - FOOD SERVICE ELECTRICAL/REFRIGERATION PLAN
Scale: 1/4" = 1'-0"

REVISIONS

CONFORMED SET

HALLIDAY ASSOCIATES
656 NW NORWOOD
CAMAS, WASH. 98607
360 - 834 - 6657
FAX 360 - 834 - 5453
FOOD FACILITY CONSULTANTS
SPACE PLANNING & DESIGN

Western State Hospital
BUILDING 22, PATIENT SUPPORT CENTER
PATIENT SUPPORT CENTER
9601 STEILACOOM BLVD SW, LAKEWOOD, WASHINGTON 98498-7213

NAC ARCHITECTURE
nacarchitecture.com
2025 FIRST AVE | SUITE 300
SEATTLE WA 98121
P:206.441.4522

DSHS NO	2016-410G(2-1)
NAC NO	121-16004
DRAWN	LB/SH
CHECKED	LB
DATE	03/16/2018

FIRST FLOOR FOOD SERVICE ELECTRICAL/ REFRIGERATION PLAN

FS1.04

© 2016 NAC inc

9/19/2017 2:38:39 PM D:_Revit\WSH_Arch_cjacobs@nacarchitecture.com.rvt

ELECTRICAL NOTES

1. THIS DRAWING IS NOT TO BE USED FOR ESTABLISHING ROUGH-IN LOCATIONS. REFER TO DIMENSIONED DRAWINGS PREPARED BY THE KITCHEN EQUIPMENT CONTRACTOR.
2. UNDER ELECTRICAL WORK OF DIVISION 26, PROVIDE ALL ROUGH-INS AND FINAL CONNECTIONS IN CONFORMANCE WITH LOCAL CODES.
3. HOOD LIGHTS ARE FURNISHED UNDER KITCHEN EQUIPMENT, DIVISION 11. UNDER ELECTRICAL WORK OF DIVISION 26, FURNISH AND INSTALL SWITCHES AND FURNISH AND INSTALL ALL INTERCONNECTING CONDUIT AND WIRING CONCEALED FROM SIGHT.
4. UNDER ELECTRICAL WORK OF DIVISION 26, FURNISH AND INSTALL ALL INTERCONNECTING WIRING ACROSS CEILING AS REQUIRED BETWEEN HOODS AND HOOD FIRE CONTROL PANEL.
5. WALK-IN COLD STORAGE ROOMS, LIGHTS, AND CEILING MOUNT EVAPORATORS ARE FURNISHED AND INSTALLED UNDER KITCHEN EQUIPMENT, DIVISION 11. UNDER ELECTRICAL WORK OF DIVISION 26, FURNISH AND INSTALL ALL INTERCONNECTING CONDUIT AND WIRING ABOVE CEILING CONCEALED FROM SIGHT.
6. ALL ELECTRICAL RECEPTACLES SHALL BE MOUNTED HORIZONTALLY ON FIXTURES AND WALLS.
7. ALL EVAPORATOR MOTOR CONNECTIONS SHALL BE MADE WITH CONDUIT TO A J-BOX. PLUG-IN TYPE CONNECTIONS WILL NOT BE ACCEPTED.
8. COLD STORAGE ROOM EVAPORATOR DRAIN LINES (INCLUDING HEAT TAPE FOR FREEZER DRAIN) ARE FURNISHED AND INSTALLED UNDER KITCHEN EQUIPMENT, DIVISION 11. TRAP AT OUTLET END.
9. REFRIGERATION, HIGH PRESSURE WASH SYSTEM, AND BEVERAGE LINES SHOWN ARE SCHEMATIC ONLY AND SHALL BE ADJUSTED TO FIT BUILDING CONDITIONS.
10. UNDER ELECTRICAL WORK OF DIVISION 26, PROVIDE ALL DISCONNECTS, INTERLOCKS, AND CONTRACTORS REQUIRED BY LOCAL CODES.
11. UNDER ELECTRICAL WORK OF DIVISION 26, FURNISH AND INSTALL SHUNT TRIP CIRCUIT BREAKERS TO SHUT OFF POWER SUPPLY TO ALL ELECTRICAL COOKING EQUIPMENT DURING FIRE SYSTEM ACTIVATION.
12. UNDER WORK OF KITCHEN EQUIPMENT, DIVISION 11, FURNISH AND INSTALL STAINLESS STEEL OR CHROME PLATED ESCUTCHEON PLATES FOR ALL ELECTRICAL CONNECTIONS PENETRATING COUNTER TOPS FOR BELOW COUNTER PLUG-INS.
13. UNDER ELECTRICAL WORK OF DIVISION 26, FURNISH AND INSTALL ALL INTERCONNECTING WIRING AS REQUIRED BETWEEN BOOSTER HEATER AND DISHWASHER.
14. UNDER ELECTRICAL WORK OF DIVISION 26, FURNISH AND INSTALL ALL INTERCONNECTING WIRING BETWEEN WAREWASHER CONTROL PANEL AND EXHAUST FAN FOR AUTO FAN ON/OFF DURING EQUIPMENT OPERATION.
15. UNDER ELECTRICAL WORK OF DIVISION 26, PROVIDE POWER TO EXHAUST FAN ON ROOF AND INTERLOCK WITH MAKE-UP AIR SUPPLY UNIT PER PER MECHANICAL ENG. PLANS. PROVIDE WALL SWITCH WITH PILOT LIGHT @ 48" ABOVE FINISHED FLOOR.
16. REFRIGERATION BEACON SYSTEM CONTROLLER, FURNISHED BY DIVISION 11, SHALL MONITOR WALK-IN EVAPORATORS & CONDENSING UNITS. UNDER ELECTRICAL WORK OF DIVISION 26 PROVIDE POWER FROM EVAPORATOR COILS USING 24V 18 GA. LOW VOLTAGE WIRING.
17. UNDER ELECTRICAL WORK OF DIVISION 26 LOCATE MANUAL FIRE SUPPRESSION PULL STATION PER CODES. PROVIDE OCTAGON BOX AND RUN EMPTY CONDUIT TO FIRE SUPPRESSION CONTROL HEAD. MINIMUM 12" RADIUS BENDS IN ANY CHANGE OF DIRECTION. SET PULL STATION BOX @ +48" A.F.F. TO CENTER LINE.
18. RUN 1" DIA. CONDUIT FOR ISOLATED & DEDICATED CASH SYSTEM COMMUNICATION LINES. RUN UNDER SLAB TO PULL BOX, UP WALL, ACROSS CEILING, & CONNECT TO PULL BOX LOCATED @ MANAGERS STATION. VERIFY ALL SYSTEM REQUIREMENTS FOR OWNER SUPPLIED EQUIPMENT.

SYMBOLS

- 5" X 5" PULL BOX AT HEIGHT NOTED ON PLAN, MEASURED FROM FINISHED FLOOR NOT RAISED BASES, TO C OF PB, AND FLUSH WITH FIN. WALL. USE 3" O CONDUIT, DOWN WITH WALL FROM ABOVE CEILING. ALL THE ABOVE FURNISHED AND INSTALLED BY ELECTRICAL CONTRACTOR.
- REFRIGERATION LINE CONNECTION AT EVAPORATOR BY KITCHEN EQUIPMENT CONTRACTOR.
- REFRIGERATION SYSTEM BY KITCHEN EQUIPMENT CONTRACTOR.
- INSULATED REFRIGERATION LINES, RUN FROM CONDENSING UNITS AND ABOVE FINISHED CEILING BY KITCHEN EQUIPMENT CONTRACTOR.
- CONDUIT UNDER FLOOR SIZE AS NOTED ON PLAN FROM PB IN WALL. CONDUIT SHALL HAVE 24" RADIUS BENDS FURNISHED AND INSTALLED BY ELECTRICAL CONTRACTOR.

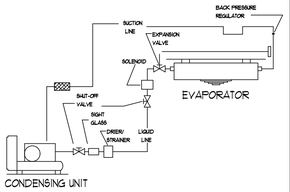

REMOTE, NORMAL TEMP. REFR. SCHEMATIC

NO SCALE

INCLUDE CRANKCASE HEATERS FOR ALL SYSTEMS EXPOSED TO FREEZING WEATHER.	ADD OIL SEPARATORS TO LOW TEMPERATURE SYSTEMS	ALL SYSTEMS DESIGNED FOR +90 AMBIENT

FIRE PROTECTION LEGEND

FIRE PROTECTION SYSTEM MANUAL PULL (F)

NOTE:
LOCATE MANUAL FIRE SUPPRESSION PULL STATIONS PER CODES - DEVICES TO BE LOCATED A MINIMUM OF 10 FEET AND A MAXIMUM OF 20 FEET FROM THE KITCHEN EXHAUST SYSTEM IT SERVES. E.C. TO PROVIDE OCTAGON BOX AND RUN EMPTY CONDUIT TO FIRE SUPPRESSION CONTROL HEAD. MINIMUM 12" RADIUS BENDS IN ANY CHANGE OF DIRECTION. SET PULL STATION BOX @ +48" A.F.F. TO CENTERLINE. TYPICAL ALL LOCATIONS

ELECTRICAL SCHEDULE

ITEM NO.	E.NO.	VOLTS	Ø	DESCRIPTION	LOCN.	HEIGHT	SERVICE TO :	RATING	REMARKS
2	E1	208	3	J-BOX	ROOF	VERIFY	W.I. FREEZER CONDENSING UNIT	4-1/2 HP	SYSTEM A - BEACON SYSTEM
2	E2	208	3	J-BOX	ROOF	VERIFY	W.I. MEAT/DIARY COOLER CONDENSING UNIT	3-1/2 HP	SYSTEM B - BEACON SYSTEM
2	E3	208	3	J-BOX	ROOF	VERIFY	W.I. PRODUCE COOLER CONDENSING UNIT	1 1/2 HP	SYSTEM C - BEACON SYSTEM
2	E4	208	3	J-BOX	ROOF	VERIFY	W.I. FINISHING COOLER CONDENSING UNIT	3 HP	SYSTEM D - BEACON SYSTEM
2	E5	208	3	J-BOX	ROOF	VERIFY	BLAST CHILLER CONDENSING UNIT	81.5 AMPS	SYSTEM E
2	E6	208	3	J-BOX	ROOF	VERIFY	BLAST CHILLER CONDENSING UNIT	81.5 AMPS	SYSTEM F- CAP FOR FUTURE EQUIPMENT
---	E7	---	--	NOT USED	---	---	---	---	---
2	E8	208	1	J-BOX	CEILING	---	WALK-IN FREEZER EVAPORATOR	23.5 AMPS	SYSTEM A - BEACON SYSTEM
1	E9	120	1	J-BOX	CEILING	---	(10) WALK-IN LIGHTS	800 W	80 W EACH
1	E10	120	1	J-BOX	CEILING	---	WALK-IN DOOR HEATER	500 W	---
1	E11	120	1	J-BOX	CEILING	---	WALK-IN DRAIN LINE HEATER	500 W	---
2	E12	120	1	J-BOX	CEILING	---	WALK-IN MEAT/DAIRY COOLER EVAPORATOR	2.7 AMPS	SYSTEM B - BEACON SYSTEM
1	E13	208	1	J-BOX	CEILING	---	ELECTRIC SLIDING WALK-IN DOOR	3/4 HP	---
11	E14	120	1	DCO	FIXTURE	34"	PIZZA PREP REFRIGERATOR	6.3 AMPS	NEMA 5-15P - VERIFY WITH EXISTING EQUIPMENT
2	E15	120	1	J-BOX	CEILING	---	WALK-IN PRODUCE COOLER EVAPORATOR	2.7 AMPS	SYSTEM C - BEACON SYSTEM
11	E16	120	1	J-BOX	CEILING	---	(3) WALK-IN LIGHTS	240 W	80 W EACH
11	E17	120	1	J-BOX	CEILING	---	(10) WALK-IN LIGHTS	800 W	80 W EACH
2	E18	120	1	J-BOX	CEILING	---	WALK-IN FINISHING COOLER EVAPORATOR	5.5 AMPS	SYSTEM D - BEACON SYSTEM
20	E19	120/208	1	SCO	WALL	36"	GLASS DOOR REFRIGERATOR & FREEZER	14.4 AMPS	FURNISHED WITH NEMA 14-20P. VERIFY WITH EXISTING EQUIPMENT
21	E20	120/208	1	SCO	WALL	36"	REACH-IN DUAL TEMP REFRIG/FREEZER	14.1 AMPS	FURNISHED WITH NEMA 14-20P. VERIFY WITH EXISTING EQUIPMENT
23	E21	120	1	DCO	WALL	36"	REACH-IN FREEZER	12 AMPS	FURNISHED WITH NEMA 5-15P. VERIFY WITH EXISTING EQUIPMENT
---	E22	120	1	DCO	WALL	18"	CONVENIENCE	1440 W	DEDICATED CIRCUIT
26	E23	208	1	J-BOX	CEILING	---	CUBE ICE MACHINE WITH STORAGE BIN	9.7 AMPS	VERIFY WITH EXISTING EQUIPMENT. RUN ELECTRICAL CONCEALED IN UTILITY CHASE
---	E24	120	1	DCO	WALL	45"	CONVENIENCE	1440 W	DEDICATED CIRCUIT
---	E25	120	1	DCO (DROP-CORD)	CEILING	---	CONVENIENCE	1440 W	DEDICATED CIRCUIT
20, 22	E26	120	1	DCO	WALL	36"	REACH-IN REFRIGERATOR & REFRIG./FREEZER	6.3 AMPS	FURNISHED WITH NEMA 5-15P. VERIFY WITH EXISTING EQUIPMENT
---	E27	120	1	DCO	FIXTURE	34"	CONVENIENCE	1440 W	DEDICATED CIRCUIT. EXTEND FROM WALL STUB
45	E28	120	1	DCO	WALL	18"	PREP TOP REFRIGERATOR	12 AMPS	FURNISHED WITH NEMA 5-15P
69	E29	120	1	DCO	WALL	45"	VEGETABLE CUTTER/SLICER	11.5 AMPS	FURNISHED WITH NEMA 5-15P
41	E30	120	1	DCO (DROP-CORD)	CEILING	---	FOOD CUTTER	1 HP	FURNISHED WITH NEMA 5-15P. VERIFY WITH EXISTING EQUIPMENT
40	E31	120	1	DCO	WALL	45"	MEAT CUTTER	1 1/2 HP	FURNISHED WITH NEMA 5-15P. VERIFY WITH EXISTING EQUIPMENT
---	E32	---	--	NOT USED	---	---	---	---	---
---	E33	---	--	NOT USED	---	---	---	---	---
52	E34	120	1	DCO	WALL	45"	FOOD PROCESSOR	3 HP	FURNISHED WITH NEMA 5-15P. VERIFY WITH EXISTING EQUIPMENT
37	E35	120	1	DCO	WALL	18"	SLICER	1.7 AMPS	FURNISHED WITH NEMA 5-15P. VERIFY WITH EXISTING EQUIPMENT
49	E36	480	3	J-BOX	WALL	58"	80-QUART MIXER	6 AMPS	---
33	E37	120	1	DCO (DROP-CORD)	CEILING	---	FOOD PROCESSOR	3 HP	FURNISHED WITH NEMA 5-15P. VERIFY WITH EXISTING EQUIPMENT
---	E38	---	--	NOT USED	---	---	---	---	---
---	E39	---	--	NOT USED	---	---	---	---	---
72	E40	120	1	J-BOX	CEILING	---	(6) ROUND CANOPY HOOD LIGHTS	216 W	36W EACH. VERIFY EXACT LOCATION FOR CONNECTION
56	E41	480	3	J-BOX	WALL	36"	GRIDDLE	16.2 KW	---
56	E42	480	3	J-BOX	WALL	36"	GRIDDLE	10.8 KW	---
58	E43	480	3	J-BOX	WALL	13"	40-GALLON TILTING SKILLET	16 KW	---
61	E44	480	3	J-BOX	WALL	18"	DOUBLE-STACK CONVECTION OVEN	25 KW	---
60	E45	208	3	J-BOX	WALL	6"	DOUBLE STACK CONVECTION STEAMERS	91.7 AMPS	TOTAL
59	E46	480	3	J-BOX	WALL	12"	FRENCH PLATE/FRY TOP RANGE	15.8 KW	---
63	E47	120	1	DCO (DROP-CORD)	CEILING	---	BLENDER	3-3/4 HP	FURNISHED WITH NEMA 5-15P
64	E48	120	1	DCO	WALL	36"	REACH-IN REFRIGERATOR	8.2 AMPS	FURNISHED WITH NEMA 5-15P
54, 72, 85	E49	120	1	J-BOX	WALL	60"	CANOPY HOOD (M.A.R.V.E.L.) CONTROL PANEL	15 AMPS	---
85	E50	120	1	J-BOX	CEILING	---	(7) ROUND CANOPY HOOD LIGHTS	252 W	36W EACH. VERIFY EXACT LOCATION FOR CONNECTION
70	E51	480	3	J-BOX	CEILING	---	ROLL-IN RACK OVEN (HEATING CIRCUIT)	64 AMPS	---
70	E52	120	1	J-BOX	CEILING	---	ROLL-IN RACK OVEN (CONTROL CIRCUIT)	15 AMPS	DEDICATED
70	E53	120	1	J-BOX	WALL	102"	FIRE PROTECTION SYSTEM (R.I. RACK OVEN)	1 KW	---
54, 72, 85	E54	120	1	J-BOX	WALL	102"	FIRE PROTECTION SYSTEM	1 KW	---
54	E55	120	1	J-BOX	CEILING	---	(8) ROUND CANOPY HOOD LIGHTS	288 W	36W EACH. VERIFY EXACT LOCATION FOR CONNECTION
54, 72, 85	E56	120	1	J-BOX	CEILING	---	CAPTURE JET FAN (M.A.R.V.E.L.) SYSTEM	15 AMPS	INTERCONNECT WITH E49
74	E57	480	3	J-BOX	WALL	18"	DOUBLE-STACK CONVECTION OVEN	25 KW	TOTAL CONNECTIONS. VERIFY REQUIREMENTS FOR EXISTING EQUIPMENT
75	E58	480	3	J-BOX	WALL	12"	ROLL-IN COMBI-OVEN STEAMER	66 KW	---
78	E59	480	3	J-BOX	WALL	18"	100-GALLON COOKER/MIXER KETTLE	54.8 AMPS	---
78	E60	120	1	DCO (DROP-CORD)	CEILING	---	MID VOLUME PUMP FILL STATION	15 AMPS	VERIFY NEMA PLUG CONFIGURATION
80	E61	208	3	J-BOX	WALL	76"	ROLL-IN BLAST CHILLER	8 AMPS	CAP FOR FUTURE EQUIPMENT
80	E62	208	3	J-BOX	WALL	76"	ROLL-IN BLAST CHILLER	8 AMPS	---
82	E63	120	1	DCO	WALL	45"	SODA DISPENSER	1440 W	VERIFY REQUIREMENTS WITH VENDOR SUPPLIED EQUIPMENT
84	E64	120	1	SCO (DROP-CORD)	CEILING	---	COLD DISH-UP WELLS	9.9 AMPS	FURNISHED WITH NEMA 5-15P
84	E65	120	1	DCO (DROP-CORD)	CEILING	---	CONVENIENCE	1440 W	DEDICATED CIRCUIT
86	E66	208	3	SCO	WALL	18"	TRAY CART DOCKING STATION	27.6 AMPS	FURNISHED WITH NEMA L15-30P
96	E67	208	3	J-BOX	WALL	60"	HIGH PRESSURE WASH SYSTEM	9 AMPS	GFCI
96	E68	24V	1	J-BOX	WALL	54"	SATELLITE HIGH PRESSURE WASH PORT	---	POWER FROM E67 MASTER CONTROL PANEL-5CONDUCTOR WIRE (SHIELDED)
76	E69	480	3	J-BOX	WALL	9"	TWO 6-GALLON TILTING KETTLES W/STAND	26 AMPS	---
77	E70	480	3	J-BOX	WALL	18"	100-GALLON STATIONARY KETTLES	39.2 KW	HIGH WATTAGE
102	E71	480	3	J-BOX	WALL	6"	WAREWASHER BOOSTER HEATER	27 KW	---
102	E72	480	3	J-BOX	WALL	65"	WAREWASHER (TANK HEAT & MOTORS)	45.7 AMPS	---
102	E73	120	1	DCO	WALL	64"	WAREWASHER DETERGENT FEED	1440 W	DEDICATED CIRCUIT
102	E74	208	1	J-BOX	FIXTURE	60"	CONVEYOR CONTROL PANEL	3.3 AMPS	EXTEND FROM FLOOR STUB
98	E75	208	3	J-BOX	FIXTURE	18"	APEX HEAVY-DUTY SCRAP ACCUMULATOR	3/4 HP	EXTEND FROM FLOOR STUB
91	E76	208	3	J-BOX	WALL	61"	BLOWER-DRYER	5 AMPS	---
91	E77	480	1	J-BOX	WALL	8"	BOOSTER HEATER	30 KW	---
91	E78	480	3	J-BOX	WALL	64"	POT & PAN WASHER	6-1/6 HP	25 FL AMPS
91	E79	120	1	DCO	WALL	64"	POT & PAN WASHER DETERGENT FEED	1440 W	DEDICATED CIRCUIT
---	E80	---	--	NOT USED	---	---	---	---	---
104	E81	208	3	J-BOX	WALL	24"	DEHYDRATOR	12.3 KW	CAP FOR FUTURE EQUIPMENT
107	E82	120	1	J-BOX	WALL	96"	AIR CURTAIN	3.4 AMPS	INTERCONNECT TO DOOR MICRO-SWITCH
---	E83	---	--	NOT USED	---	---	---	---	---
---	E84	---	--	NOT USED	---	---	---	---	---
---	E85	---	--	NOT USED	---	---	---	---	---

REFER TO WSH-FS2.03 FOR E86 AND ON

1 FIRST FLOOR - FOOD SERVICE ELECTRICAL SCHEDULE
Scale: NONE

REVISIONS

CONFORMED SET

HALLIDAY ASSOCIATES
636 NW NORWOOD
CAMAS, WASH. 98607
360.834.6657
FAX 360.834.5435
FOOD FACILITY CONSULTANTS
SPACE PLANNING + DESIGN

FOOD SERVICE CONSULTANTS SOCIETY INTERNATIONAL

Western State Hospital
BUILDING 22, PATIENT SUPPORT CENTER
PATIENT SUPPORT CENTER
9601 STEILACOOM BLVD SW, LAKEWOOD, WASHINGTON 98498-7213

NAC ARCHITECTURE
nacarchitecture.com
2025 FIRST AVE | SUITE 300
SEATTLE WA 98121
P:206.441.4522

© 2016 NAC Inc

DSHS NO	2016-410G(2-1)
NAC NO	121-16004
DRAWN	LB/SH
CHECKED	LB
DATE	03/16/2018

FIRST FLOOR FOOD SERVICE ELECTRICAL SCHEDULE

FS1.04S

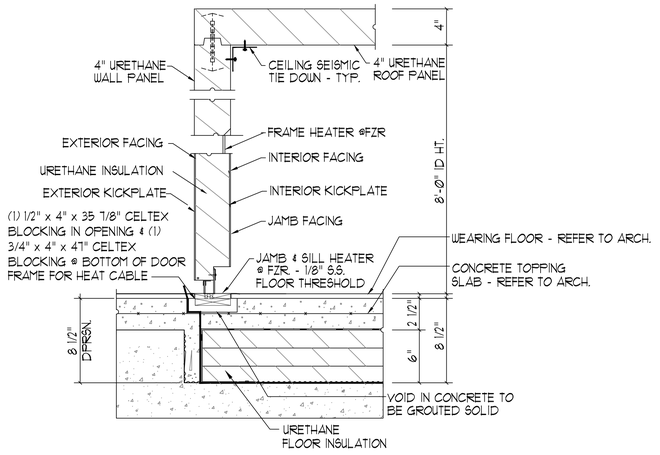

A DOOR/FLOOR SECTION
NO SCALE

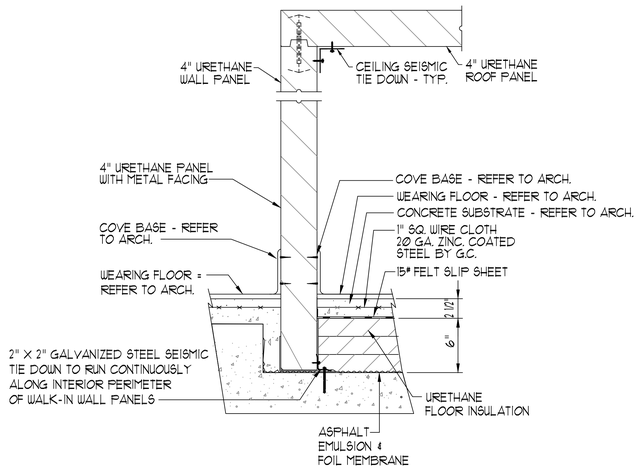

B WALL/FLOOR SECTION
NO SCALE

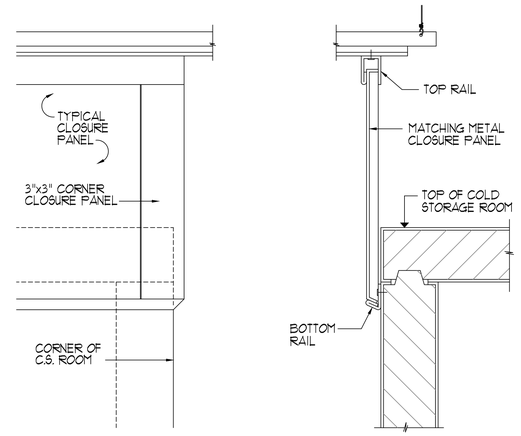

FRONT ELEVATION SECTION

C CLOSURE PANEL DETAILS
NO SCALE

WALK-IN NOTES

1. REFER TO ARCHITECTURAL FINISH SCHEDULE FOR FINISHED FLOOR MATERIAL AT INTERIOR AND EXTERIOR OF WALK-IN COLD STORAGE ROOMS.
2. WALL, CEILING, AND DOOR INSULATION SHALL BE AT LEAST R-25 FOR COOLERS AND R-32 FOR FREEZERS. FREEZER FLOOR INSULATION SHALL BE AT LEAST R-28. NOTE: SPECIFIED 4" INSULATED WALL PANELS ARE TO HAVE AN R-VALUE OF 8.06 PER INCH WITH A TOTAL MINIMUM 32.26 R VALUE.

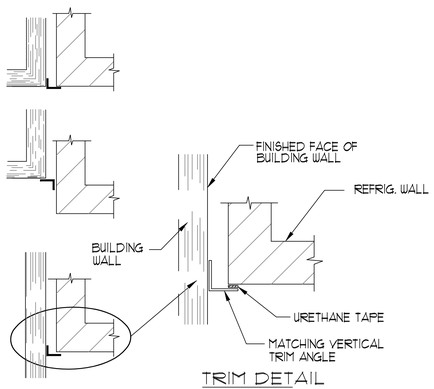

TRIM DETAIL
HALF

D VERITCAL TRIM MOULDING DETAIL
NO SCALE

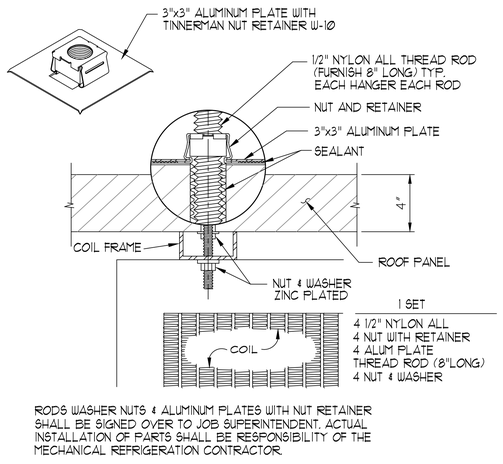

RODS WASHER NUTS & ALUMINUM PLATES WITH NUT RETAINER SHALL BE SIGNED OVER TO JOB SUPERINTENDENT. ACTUAL INSTALLATION OF PARTS SHALL BE RESPONSIBILITY OF THE MECHANICAL REFRIGERATION CONTRACTOR.

E NYLON ROD COIL HANGER DETAIL
NO SCALE

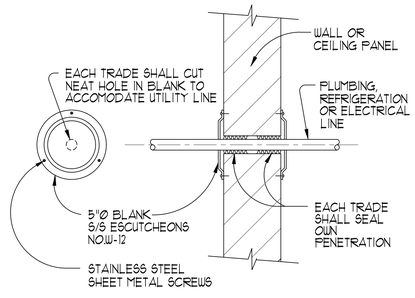

F TYPICAL ESCUTCHEON DETAIL
NO SCALE

1 FIRST FLOOR - FOOD SERVICE WALK-IN DETAILS
Scale: NONE

9/19/2017 2:38:39 PM D:_Revit\WSH_Arch_cjacobs@nacarchitecture.com.rvt

REVISIONS

CONFORMED SET

HALLIDAY ASSOCIATES
656 NW NORWOOD
CAMAS, WASH. 98607
360 . 834 . 6657
FAX 360 . 834 . 5455
FOOD FACILITY CONSULTANTS
SPACE PLANNING & DESIGN

Western State Hospital
BUILDING 22, PATIENT SUPPORT CENTER
PATIENT SUPPORT CENTER
9601 STEILACOOM BLVD SW, LAKEWOOD, WASHINGTON 98498-7213

NAC ARCHITECTURE
nacarchitecture.com
2025 FIRST AVE | SUITE 300
SEATTLE WA 98121
P:206.441.4522

© 2018 NAC Inc.

DSHS NO	2016-410G(2-1)
NAC NO	121-16004
DRAWN	LB/SH
CHECKED	LB
DATE	03/16/2018

FIRST FLOOR
FOOD SERVICE
WALK-IN DETAILS

FS2.01

REVISIONS

HOOD INFORMATION TABLE

HOOD NUMBER	HOOD MODEL	EXHAUST AIR FLOW REQUIREMENTS: EXHAUST CFM	T.A.B. PORT STATIC PRESSURE	TOTAL HOOD STATIC PRESSURE	EXHAUST COLLAR: QTY.	LENGTH	WIDTH	GREASE EXTRACTOR: QTY.	SIZE L	SIZE H	TYPE	HOOD CONSTRUCTION	HOOD WEIGHT (LBS)
54A	KVE	2511	.29"	.40"	1	17"	12"	6 1	20" 11"	13" 13"	KSA	ALL 18GA. 304 S.S.	1064
54B	KVE	2777	.30"	.41"	1	20"	12"	7 –	20" 11"	13" 13"	KSA	ALL 18GA. 304 S.S.	1146
54C	KVE	1437	.11"	.22"	1	12"	10"	6 –	20" 11"	13" 13"	KSA	ALL 18GA. 304 S.S.	1183
54D	KVE	2873	.32"	.44"	1	20"	12"	7 –	20" 11"	13" 13"	KSA	ALL 18GA. 304 S.S.	1311

TOTAL EXH. CFM = 9598

CAPTURE JET CLEARANCE DETAIL

Capture Jet® Fan Cover Clearance

Patented Capture Jet® technology perimeter air jets improve capture and containment of heat and grease emissions. It is very important to leave air space above and around the Capture Jet® air intake cover on the top of the Halton hood. Please leave 2 inches of clearance on the top and sides of the perforated Capture Jet® intake cover to allow unimpeded entrance of air into the Capture Jet® fan.

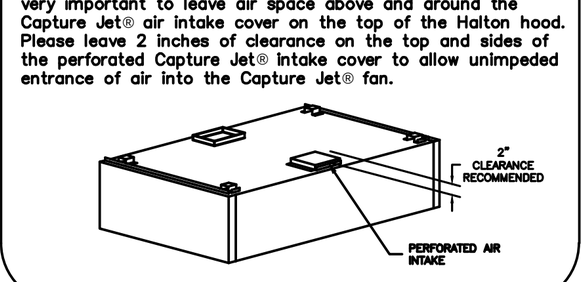

ELECTRICAL CONNECTION SCHEDULE

CONNECTION #	CONNECTION DESCRIPTION	FROM	TO
E1–H	120V, 15AMP – HOOD LIGHT POWER – 3 WIRES	BUILDING SOURCE	HOOD 54A
E2–H	FIELD CONNECTION FOR HOOD LIGHTS	HOOD 54A	HOOD 54B
E3–H	FIELD CONNECTION FOR HOOD LIGHTS	HOOD 54B	HOOD 54C
E4–H	FIELD CONNECTION FOR HOOD LIGHTS	HOOD 54C	HOOD 54D

NOTE:
FILLER PANEL TO BE PROVIDED AND INSTALLED BY OTHERS.

NOTE:
EXACT DIMENSIONS OF WALL TO BE VERIFIED PRIOR TO FABRICATION.

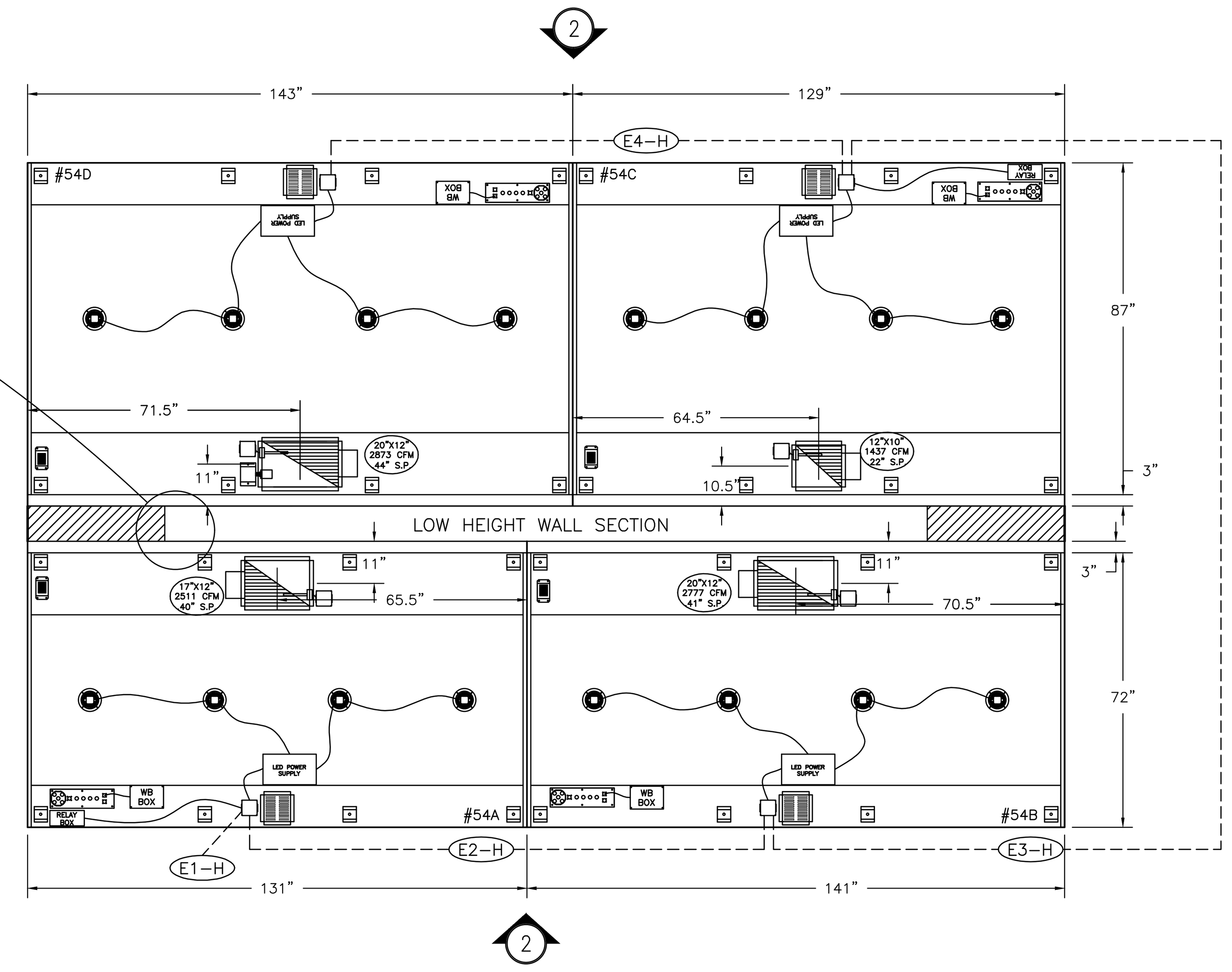

1 ITEM # 54
PLAN VIEW

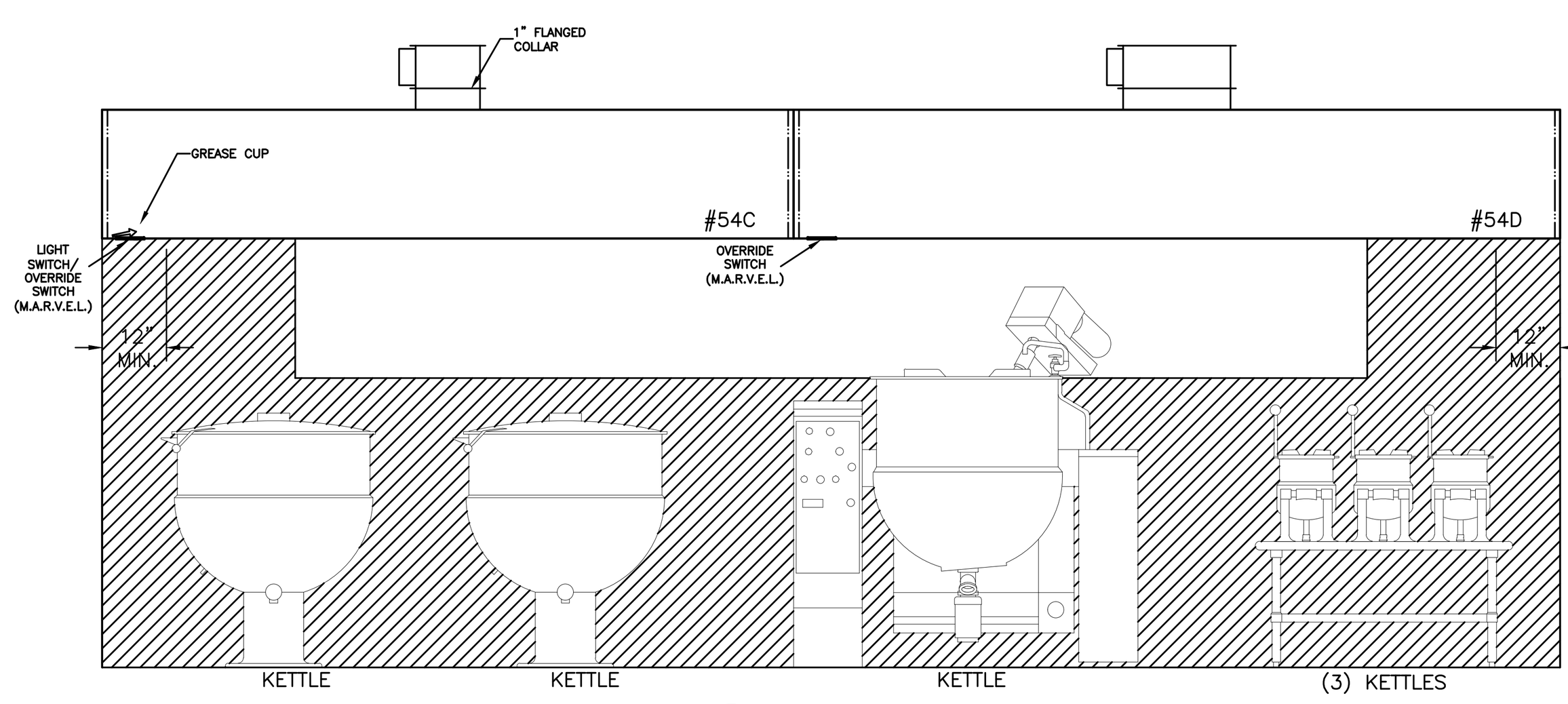

2 ITEM # 54C/D
ELEVATION VIEW

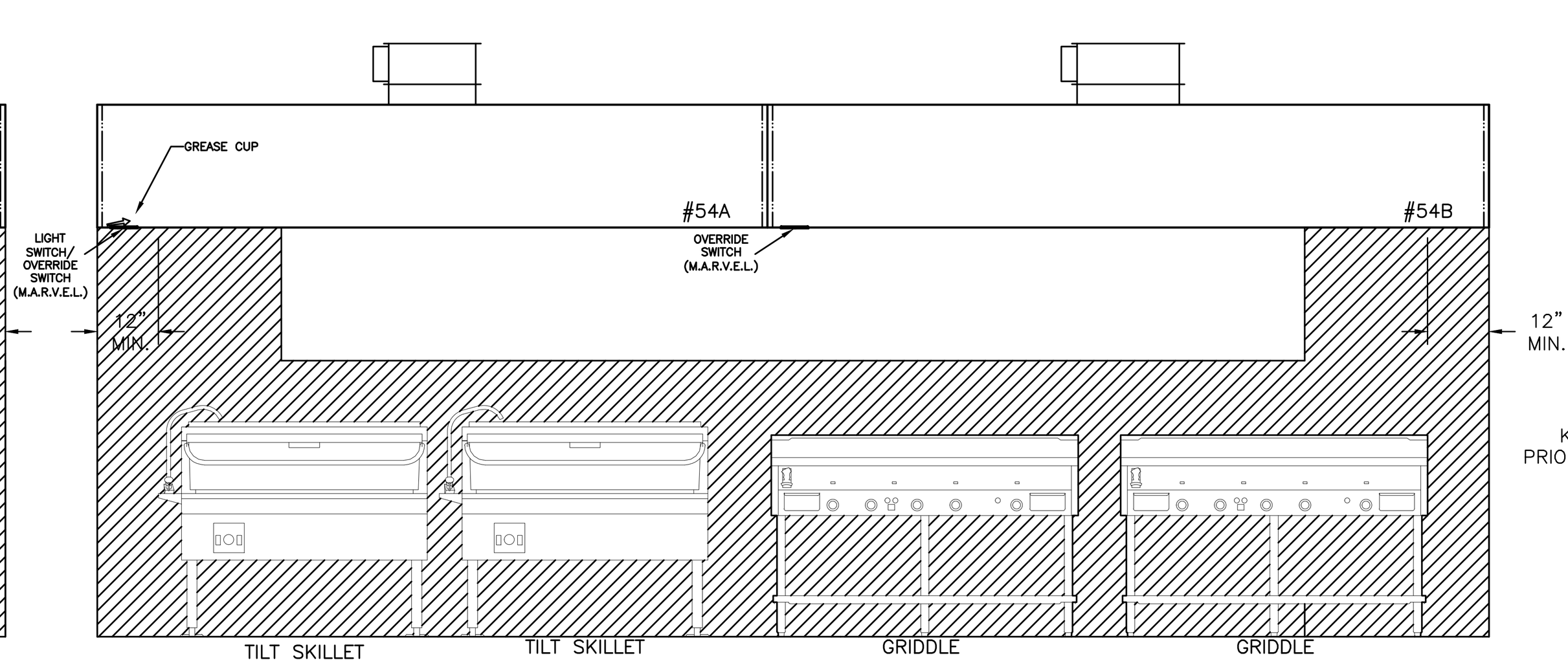

2 ITEM # 54A/B
ELEVATION VIEW

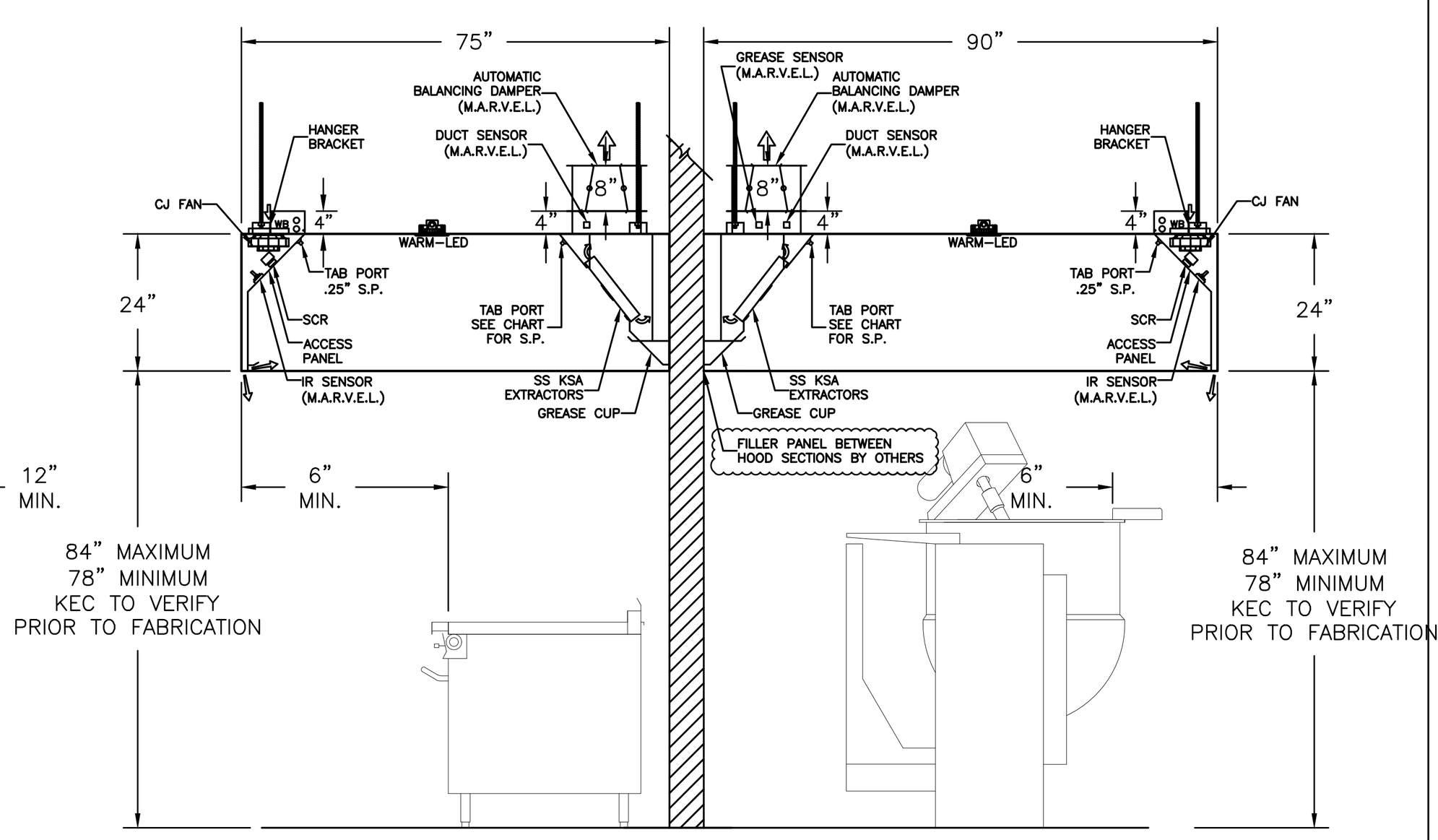

3 ITEM # 54
SECTION VIEW

GENERAL SPECIFICATIONS

1– HOOD CONSTRUCTION AND DESIGN MEETS NFPA 96 AND UL 710 STANDARD.

2– HOOD IS NSF AND ETL LISTED UNDER THE FOLLOWING FILE NUMBER: ETL #3085193CLE–002

3– ALL INSTALLATION WORK IS TO BE PERFORMED BY QUALIFIED PERSONS AND IN ACCORDANCE WITH STATE AND LOCAL BUILDING CODE REQUIREMENTS.

4– THE INSTALLATION SHALL BE IN ACCORDANCE WITH NFPA 96, REMOVAL OF SMOKE AND GREASE LADEN VAPORS FROM COMMERCIAL COOKING EQUIPMENT.

5– ALL EXHAUST DUCTWORK AND TRANSITIONS ARE TO BE PROVIDED BY THE HVAC CONTRACTOR.

6– CLEARANCE FROM HOOD AND DUCTS TO COMBUSTIBLE MATERIAL SHALL BE PER APPLICABLE BUILDING CODES.

7– FOR PROPER OPERATION OF THE HOOD SYSTEM, IT IS THE RESPONSIBILITY OF THE GENERAL CONTRACTOR TO HAVE THE HOOD BALANCED AND TESTED TO ENSURE THAT THE EXHAUST AND SUPPLY REQUIREMENTS OF THE HOOD ARE MET.

INSTALLATION REQUIREMENTS

KITCHEN EQUIPMENT CONTRACTOR'S REQUIREMENTS

1– PROVIDE DRAWINGS TO APPROPRIATE TRADES REFERENCING UTILITY SERVICE AND COORDINATE FINAL CONNECTION.

2– DELIVER, ASSEMBLE AND INSTALL HALTON SYSTEM PER DRAWING.

3– FURNISH WIRING AND PLUMBING DIAGRAMS TO END USER.

4– THE K.E.C MUST INFORM HALTON OF ANY CHANGES IN EQUIPMENT OR BUILDING STRUCTURE. FIELD MODIFICATIONS ARE THE RESPONSIBILITY OF THE K.E.C.

5– IF HALTON MANUAL EXHAUST VOLUME DAMPERS ARE PROVIDED, THE K.E.C. IS RESPONSIBLE FOR THEIR INSTALLATION OR TO MAKE ARRANGEMENTS WITH OTHER TRADES FOR THEIR INSTALLATION.

6– IF HALTON MODEL KVL BACKSHELF STYLE HOODS ARE PROVIDED, THE K.E.C. IS RESPONSIBLE FOR THE INSTALLATION OF THE CAPTURE–JET FAN.

ELECTRICAL CONTRACTOR'S REQUIREMENTS

1– PROVIDE AND CONNECT ALL REQUIRED VOLTAGES, CONNECTORS, WIRING, CONDUIT, ETC., PER NEC AND ALL APPLICABLE LOCAL CODES.

ELECTRICAL EQUIPMENT REQUIREMENTS

FLUORESCENT LIGHT FIXTURE 40 WATT MAX BULB= .67 AMP EA.

RECESSED INCANDESCENT LIGHT FIXTURE 150 WATT MAX BULB= 1.25 AMP EA.

GLOBE INCANDESCENT LIGHT FIXTURE 100 WATT MAX BULB= .83 AMP EA.

LED LIGHT FIXTURES= .30 AMP EA.

CAPTURE JET FAN= .72 AMP EA

ALL HOOD CIRCUITS ARE NOT TO EXCEED 15 AMP

LIGHT BULBS, IF REQUIRED, ARE TO BE PROVIDED BY OTHERS

CEILING HEIGHT NOTE

IF HALTON COMPANY IS TO PROVIDE CEILING CLOSURE PANELS, THE EXACT DIMENSION OF THE FINISHED CEILING HEIGHT MUST BE PROVIDED PRIOR TO RELEASE.

FINISHED CEILING HEIGHT A.F.F.: ____________

LED POWER SUPPLY UNIT

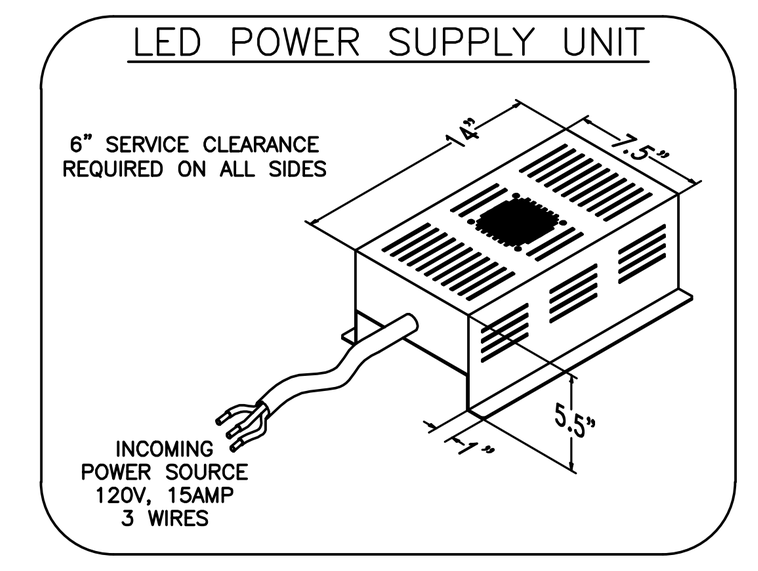

PERFORMANCE CRITERIA

OTHER MANUFACTURERS WISHING TO OFFER AN ALTERNATE TO THE SPECIFIED MANUFACTURER MUST APPLY FOR PERMISSION TO DO SO IN WRITING FROM THE OFFICE OF THE SPECIFYING CONSULTANT. APPLICATION MUST BE RECEIVED BY THE CONSULTANT AT LEAST TEN WORKING DAYS PRIOR TO THE BID DATE. ANY ALTERNATE SYSTEM MUST MEET CONSTRUCTION AND PERFORMANCE REQUIREMENTS AND EFFICIENCIES AS OUTLINED IN THIS SPECIFICATION.

REQUESTS FOR APPROVAL MUST INCLUDE GREASE FILTRATION PERFORMANCE DATA (MICRON SIZE VS. EXTRACTION EFFICIENCY) AND MANUFACTURERS OWN EXHAUST AIR FLOW CALCULATIONS BASED ON THE CONVECTIVE HEAT LOAD OF COOKING EQUIPMENT BENEATH THE HOOD.

EFFICIENCY COMPARISON DATA TO BE PERFORMED IN ACCORDANCE WITH THE MOST CURRENT ASTM STANDARD F1704 AND INCLUDE RESULTS FOR THE REQUIRED CAPTURE AND CONTAINMENT EXHAUST AIR FLOW IN ACCORDANCE WITH THE "TEST METHOD TO DETERMINE THE THRESHOLD OF CAPTURE AND CONTAINMENT." DATA MUST INCLUDE THERMAL IMAGING RESULTS VALIDATING CONFORMANCE TO ASTM F1704 AND SUPPLY AIR TEMPERATURE REQUIREMENT OF 74°F.

MAKE UP AIR WILL BE CALCULATED SO THAT THE SAME AMOUNT OF AIR WILL BE TAKEN FROM THE ZONE AS IS REQUIRED BY THE SPECIFIED SYSTEM. AN ADDITIONAL LOAD CANNOT BE PLACED ON THE KITCHEN HVAC SYSTEM.

MANUFACTURER MUST PROVIDE A WRITTEN GUARANTEE OF PERFORMANCE, ENSURING THE SPECIFYING ENGINEER THAT THE SYSTEM WILL PERFORM TO THE ENGINEER'S SATISFACTION WHEN INSTALLED AND BALANCED ACCORDING TO DESIGN AIR FLOWS AND RESULTS OF ASTM STANDARD F1704 TEST. (AS DETERMINED BY TAB PORTS AND PRESSURE VS. AIR FLOW CURVES.) CONSULTANT RESERVES THE RIGHT TO REJECT ANY SYSTEM WHICH, WHEN INSTALLED, DOES NOT PROVIDE CAPTURE AND CONTAINMENT AT THE THRESHOLD FLOW RATE DETERMINED IN ASTM F1704. REJECTED SYSTEM MUST BE REPLACED WITH SPECIFIED SYSTEM, WITH ALL REPLACEMENT COSTS PAID BY MANUFACTURER OF REJECTED SYSTEM.

ANY CHANGES IN THE SPECIFIED SIZING OF POWER WIRING, FAN SIZE, HORSEPOWER REQUIREMENTS, OR GAS LINES DUE TO THE USE OF ANY SYSTEM OTHER THAN THAT WHICH IS SPECIFIED IS THE RESPONSIBILITY OF THE ALTERNATE HOOD MANUFACTURER, AND MUST BE COORDINATED BY THE HOOD MANUFACTURER AND CONTRACTORS INVOLVED.

Typical wiring of Capture–Jet fan W/HALTON SUPPLIED SWITCH PANEL

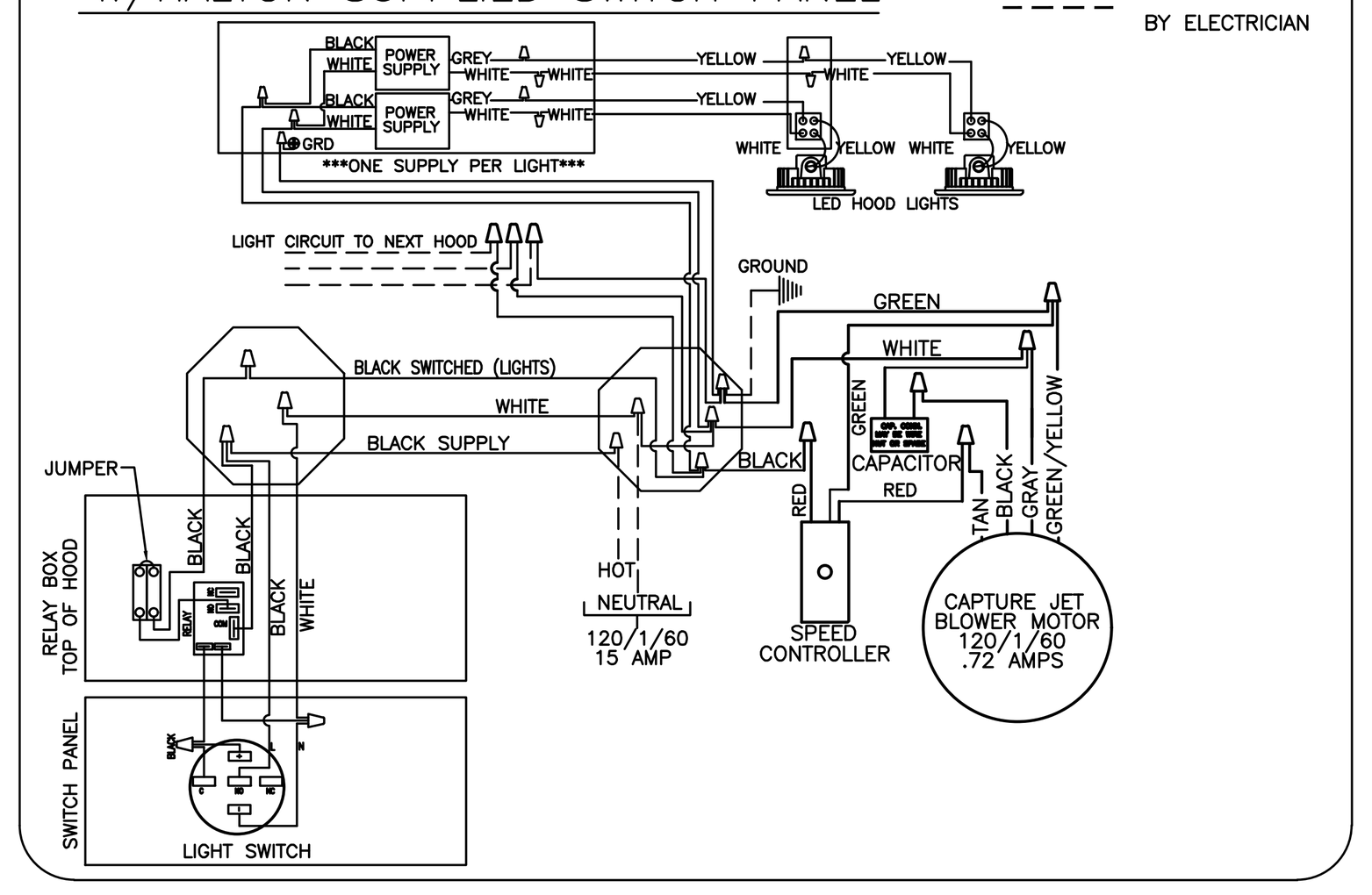

EXHAUST VOLUME DAMPER

MODEL: ABD (Automatic Balancing Damper)

TAG	"L"	"W"	QUANTITY	CONSTRUCTION*
54A	17"	12"	1	304 S.S.
54B	20"	12"	1	304 S.S.
54C	12"	10"	1	304 S.S.
54D	20"	12"	1	304 S.S.
–	–	–	–	–
–	–	–	–	–

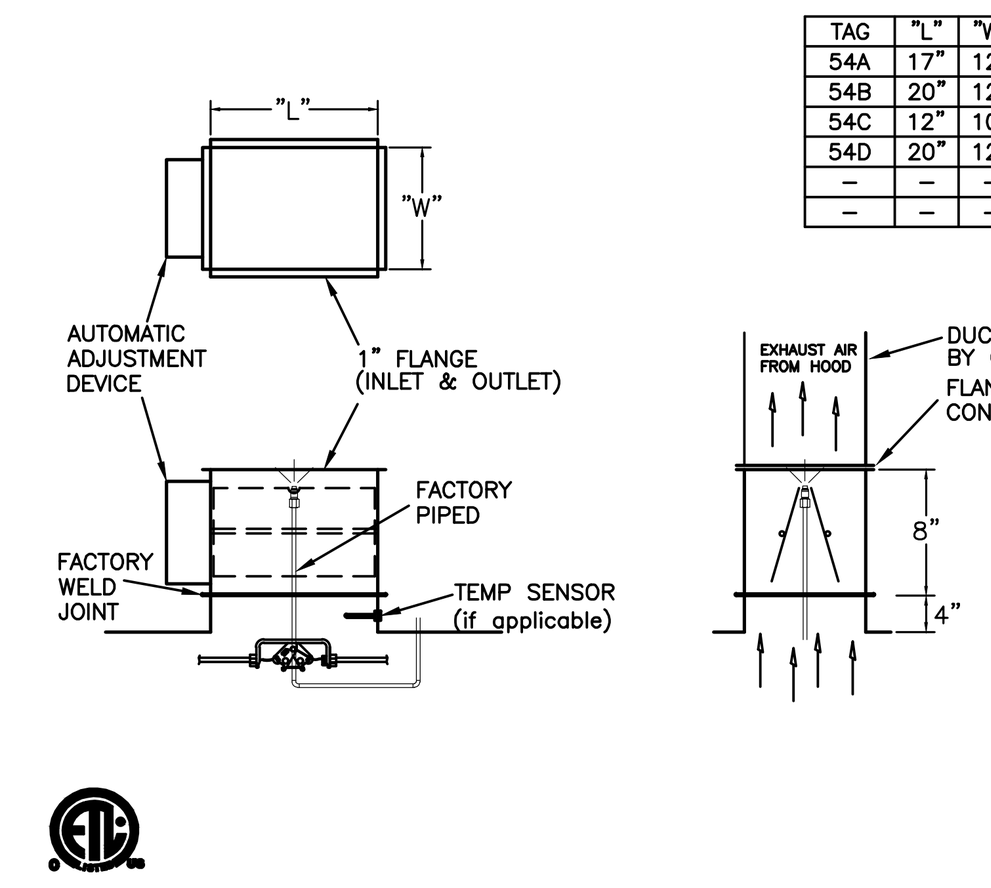

GENERAL NOTES

FIELD NOTES:
- FLANGED FIELD CONNECTION REQUIRED. SLEEVED CONNECTION WILL CAUSE DAMPER BLADES TO BIND.
- CONNECTIONS TO MEET NFPA96 REQUIREMENTS.
- ANSUL COMPONENTS SHOWN FOR REFERENCE ONLY (UNLESS ORDERED WITH HOODS).
- ADEQUATE ACCESS MUST BE PROVIDED TO DAMPERS FOR FUTURE SERVICING.

FACTORY NOTES:
* CONSTRUCTION OF DAMPER MUST MATCH THE THE UNEXPOSED CONSTRUCTION OF THE CORRESPONDING HOOD.

HANGER BRACKET LAYOUT

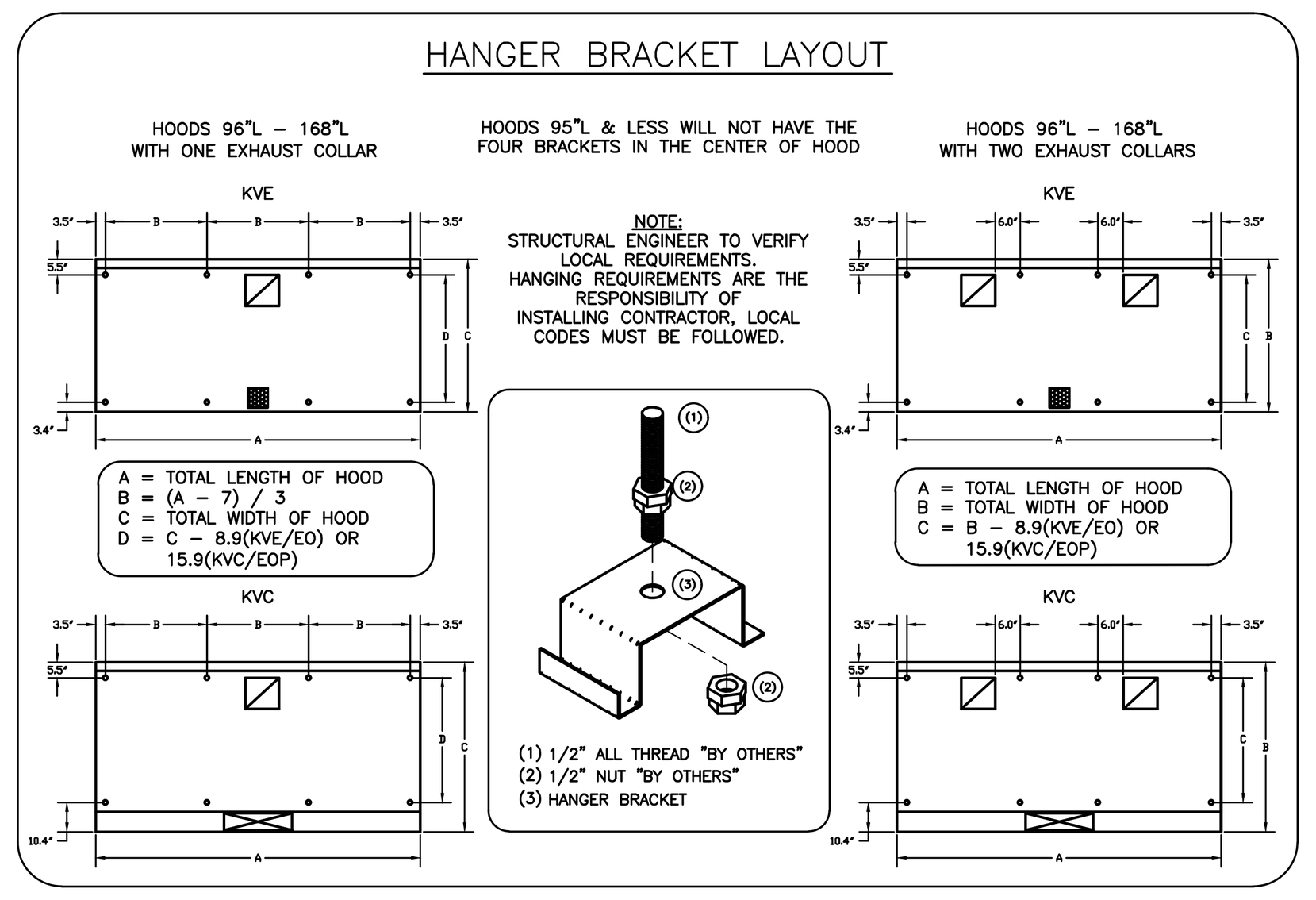

KSA GREASE EXTRACTOR

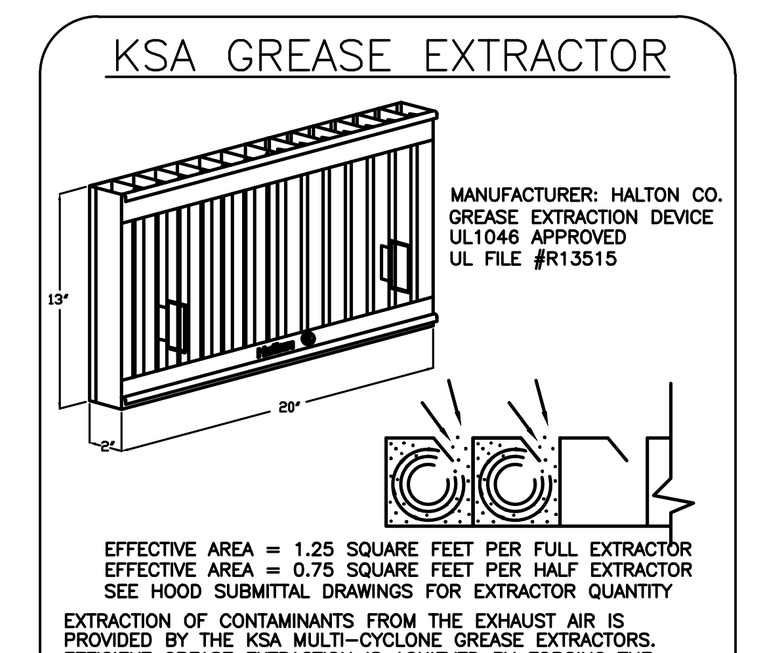

EFFECTIVE AREA = 1.25 SQUARE FEET PER FULL EXTRACTOR
EFFECTIVE AREA = 0.75 SQUARE FEET PER HALF EXTRACTOR
SEE HOOD SUBMITTAL DRAWINGS FOR EXTRACTOR QUANTITY

EXTRACTION OF CONTAMINANTS FROM THE EXHAUST AIR IS PROVIDED BY THE KSA MULTI–CYCLONE GREASE EXTRACTORS. EFFICIENT GREASE EXTRACTION IS ACHIEVED BY FORCING THE EXHAUST AIR TO SPIRAL CONTINUOUSLY IN THE SAME DIRECTION IN THE MULTIPLE CHAMBERS OF THE EXTRACTOR, THUS SEPARATING THE GREASE PARTICLES FROM THE AIR FLOW CENTRIFUGALLY.

HIGH EXTRACTION EFFICIENCY AND LOW PRESSURE LOSS OVER THE KSA REMAIN PRACTICALLY CONSTANT.

KSA REMOVAL TOOL

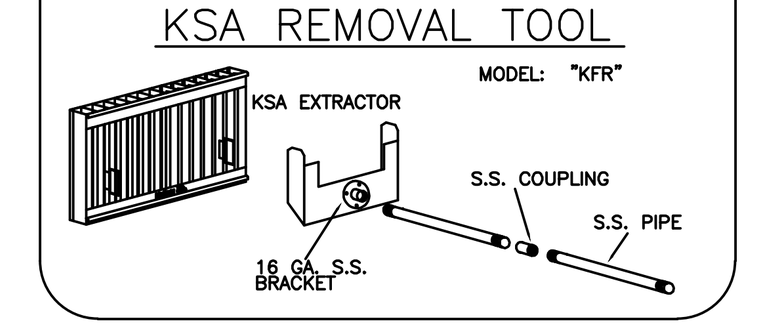

THIS DRAWING MUST BE CHECKED, SIGNED AND RETURNED TO THE APPROPRIATE FACTORY. PLEASE VERIFY THE FOLLOWING:
1. ALL DIMENSIONAL INFORMATION, MOUNTING POSITIONS AND CLEARANCES.
2. THE LOCATION AND TYPE OF COOKING EQUIPMENT.

NOTE TO APPROVER
ANY CHANGES IN COOKING EQUIPMENT SUCH AS INCREASED ENERGY INPUTS OR EQUIPMENT POSITION MAY AFFECT EXHAUST AIRFLOW. HALTON MUST BE NOTIFIED IF ANY OF THESE CHANGES OCCUR, A RECALCULATION EXHAUST AIRFLOW MAY BE REQUIRED.

☐ REVISE AND RESUBMIT

APPROVED FOR FABRICATION
☐ WITH NO CHANGES ☐ WITH CHANGES AS NOTED

APPROVED BY ____ DATE ____

COMPLIES WITH LATEST NFPA-96

MAIL APPROVED DRAWINGS TO APPROPRIATE FACTORY BELOW: WEBSITE: WWW.HALTONCOMPANY.COM

HALTON CO. (CANADA)
1021 BREVIK PLACE
MISSISSAUGA, ON L4W 3R7
1–905–624–0301

HALTON CO. (USA)
101 INDUSTRIAL DRIVE
SCOTTSVILLE, KY 42164
1–270–237–5600

REV.	REVISION DESCRIPTION	BY	DATE
1	ADDED M.A.R.V.E.L.	BM	03.06.17
2	REVISED UDS TO BE BY OTHERS	CG	03.08.17
3	REVISED HOOD LAYOUT	AG	07.07.17
4	REVISED ITEM NUMBERS	WU	07.12.17
5	REVISED ITEM NUMBER	AG	07.17.17
6	REV WALL, SHIFTED EQUIP ON 54B OVERHANG, REV WIDTH OF 54C/D	WU	07.18.17
7	REVISED PROJECT TITLE AND WALL DIMENSIONS	AG	10.05.17

PROJECT: WESTERN STATE HOSPITAL
LOCATION: WASHINGTON
DRAWN BY: CG | DATE: 02.28.17
SCALE: NOT TO SCALE
CONSULTANT: HALLIDAY ASSO

Halton

DRAWING TITLE: HOOD DETAILS
DRAWING No.: U17–165
REV. NO.: 7 | SHEET NO.: 1 of 6

CONFORMED SET

HALLIDAY ASSOCIATES
656 NW NORWOOD
CAMAS, WASH. 98607
360 – 834 – 6657
FAX 360 – 834 – 5453
FOOD FACILITY CONSULTANTS
SPACE PLANNING ■ DESIGN

PROFESSIONAL MEMBER FOODSERVICE CONSULTANTS SOCIETY INTERNATIONAL – LAURA L. BOURLAND – 700794

Western State Hospital
BUILDING 22, PATIENT SUPPORT CENTER
PATIENT SUPPORT CENTER
9601 STEILACOOM BLVD SW, LAKEWOOD, WASHINGTON 98498-7213

NAC ARCHITECTURE
nacarchitecture.com
2025 FIRST AVE | SUITE 300
SEATTLE WA 98121
P:206.441.4522

© 2016 NAC inc

DSHS NO	2016-410G(2-1)
NAC NO	121-16004
DRAWN	LB/SH
CHECKED	LB
DATE	03/16/2018

FIRST FLOOR FOOD SERVICE CANOPY HOOD DETAILS

FS3.01

1 FIRST FLOOR - FOOD SERVICE CANOPY HOOD DETAILS
Scale: NONE

9/19/2017 2:38:39 PM D:_Revit\WSH_Arch_cjacobs@nacarchitecture.com.rvt

ANSUL PIRANHA FIRE SUPPRESSION SYSTEM
FIRE SYSTEM IS INTEGRAL WITH FACTORY DESIGN/PIPING/FIELD CERTIFICATION

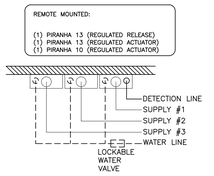

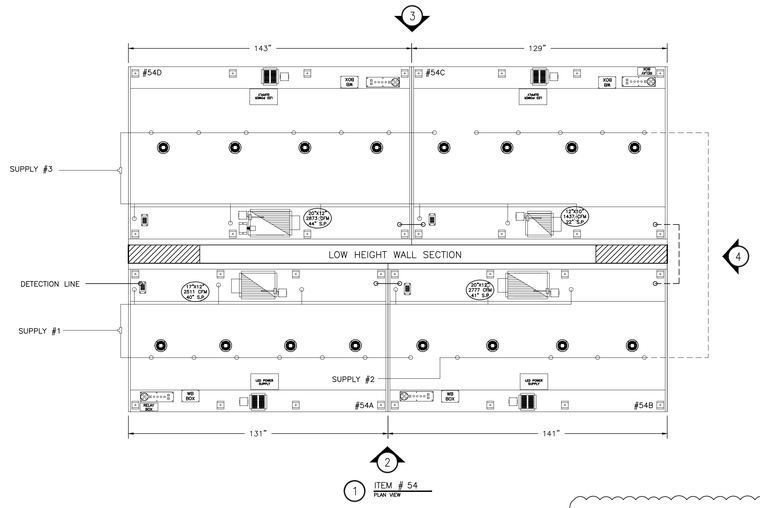

1 ITEM # 54
PLAN VIEW

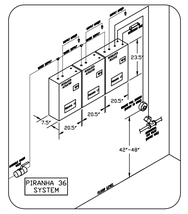

ALL APPLIANCE NOZZLES TO HAVE SWIVELS

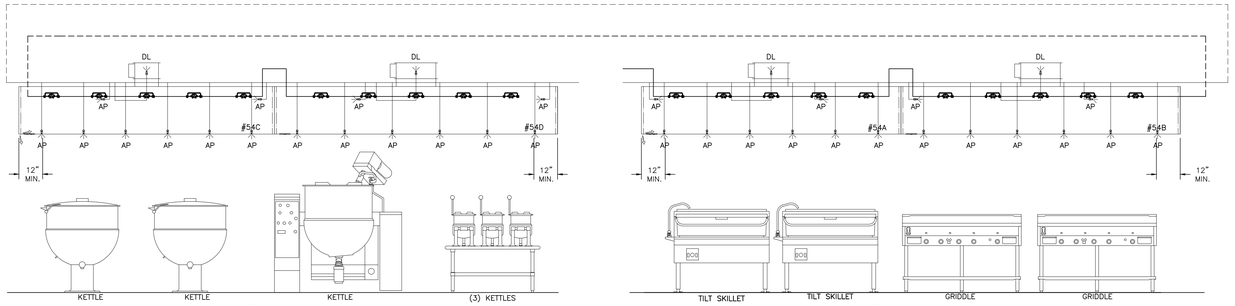

3 ITEM # 54C/D
ELEVATION VIEW

2 ITEM # 54A/B
ELEVATION VIEW

4 ITEM # 54
SECTION VIEW

1) 3 TANK SYSTEM (PIRANHA 36)
2) THREE TANK SYSTEM (8.25 GALLON)
3) 3/8" BLACK IRON PIPING (CONCEALED) 1/8" S.S. APPLIANCE DROPS (EXPOSED)
4) MECHANICAL GAS VALVE = (ADVISE SIZE)

FLOW POINT CHART

ANSUL PIRANHA FLOW POINT CALCULATION			
NOZZLE TYPE	NOZZLE FLOW PT.	NOZZLE QUANTITY	TOTAL FLOW PT.
DL	1	–	4
AP	1	–	28
TOTAL FLOW POINTS USED			36
MAX. SYSTEM FLOW POINTS: 36 (6 GALLON)			

WATER PIPING NOTES

MAXIMUM WATER PRESSURE MUST NOT EXCEED 100 PSI IF PRESSURE EXCEEDS 100PSI, SPRINKLER CONTRACTOR SHALL PROVIDE PRESSURE REDUCING VALVE.

MINIMUM WATER PRESSURE= 19 PSI
MINIMUM WATER LINE SIZE= 1" PIPE

WATER LINE SHALL BE DESIGNED TO PROVIDE REQUIRED PRESSURE AS OUTLINED AND DETAILED IN THE ANSUL PIRANHA DESIGN MANUAL.

A FULL FLOW, LOCKED OPEN, TAMPERPROOF SHUT=OFF VALVE MUST BE LOCATED AT SYSTEM. SPRINKLER CONTRACTOR SHALL PROVIDE PIPING FROM THE SPRINKLER SYSTEM AND CONNECT TO THE AUTOMAN AND INSTALL LOCKABLE VALVE PROVIDED WITH ANSUL SYSTEM

WET SPRINKLER COMPONENT LIST

IF PIRANHA FIRE SUPPRESSION SYSTEM IS TO BE CONNECTED TO A WET SPRINKLER SYSTEM THE FOLLOWING ITEMS ARE TO BE PROVIDED BY OTHERS:

LOWPOINT DRAIN VALVE
PRESSURE RELIEF VALVE
WYE STRAINER
PRESSURE REGULATING (REDUCE) VALVE

HALTON TO PROVIDE THE FOLLOWING:

ANSUL LOCKABLE SHUTOFF VALVE
PIRANHA WATER VALVE (SHUT DOWN DEVICE)

ANY COMPONENTS OTHER THAN THOSE LISTED ABOVE TO CONNECT THE PIRANHA SYSTEM FROM THE PIRANHA REGULATED RELEASE TO THE WET SPRINKLER SYSTEM WILL NOT BE PROVIDED BY HALTON.

ANSUL NOTES

GENERAL NOTES:

1. THIS INSTALLATION IS TO BE MADE IN ACCORDANCE WITH THE PIRANHA INSTALLATION MANUAL AND IN ACCORDANCE WITH ALL STATE AND LOCAL CODES.
2. THE WIRE ROPE FOR THE DETECTOR AND REMOTE PULL STATION IS TO BE INSTALLED BY AN AUTHORIZED AND FACTORY TRAINED DISTRIBUTOR OR SERVICE REPRESENTATIVE.
3. THIS INSTALLATION IS TO BE INSPECTED, PUT INTO OPERATION AND CERTIFIED BY AN AUTHORIZED AND FACTORY TRAINED DISTRIBUTOR OR SERVICE REPRESENTATIVE.
4. ELECTRICAL CONTACTS AND WIRING FOR APPLIANCE SHUT OFF TO BE PROVIDED BY THE ELECTRICAL CONTRACTOR.
5. ANSUL PIRANHA RESTAURANT FIRE SUPPRESSION SYSTEMS HAVE BEEN TESTED AND ARE LISTED BY UNDERWRITERS' LABORATORIES INC. AS PRE-ENGINEERED SYSTEMS, AND WHEN INSTALLED AS SHOWN ON THIS DRAWING SHALL COMPLY WITH ALL RELEVANT ANSUL INSTALLATION RECHARGE INSPECTION AND MAINTENANCE MANUALS AND SHALL COMPLY WITH NFPA 96 WHEN INSTALLED AND CERTIFIED BY AUTHORIZED TRAINED ANSUL DISTRIBUTORS IN ACCORDANCE WITH THE MANUAL.
6. ALL AGENT DISTIBUTION PIPING AND DETECTION CONDUIT HOOD PENETRATIONS MUST BE PROPERLY SEALED IN ACCORDANCE WITH NFPA 96.

DISTRIBUTION PIPING REQUIREMENT NOTES:

1. PIPE SHALL BE 3/8" SCHEDULE 40 BLACK IRON, CHROME PLATED OR STAINLESS STEEL UNLESS OTHERWISE NOTED.
2. FINAL NOZZLE LOCATION MAY NOT VARY FROM LOCATION SHOWN.

MANUAL PULL DETAIL

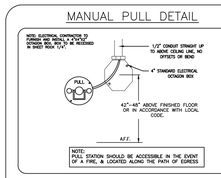

SECTION VIEW

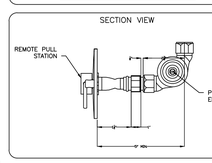

NOTE:

HALTON COMPANY WILL SUPPLY ANSUL COMPONENTS AND PRE-PIPED HOODS PER PUBLISHED ANSUL GUIDELINES AND RECOMMENDATIONS. IT IS THE RESPONSIBILITY OF THE F.S.E.C. TO INFORM HALTON OF ANY SPECIAL REQUIREMENTS OF THE LOCAL JURISDICTION PRIOR TO RELEASE OF EQUIPMENT.

NOTE:

ALL PIPING FOR LOW PROXIMITY APPLIANCE PROTECTION SHALL BE PROVIDED & INSTALLED BY THE INSTALLING ANSUL DISTRIBUTOR & NOT BY HALTON.

NOTE:

HAND HELD EXTINGUISHERS, IF REQUIRED, ARE TO BE PROVIDED BY OTHERS.

ANSUL MICROSWITCH DETAIL

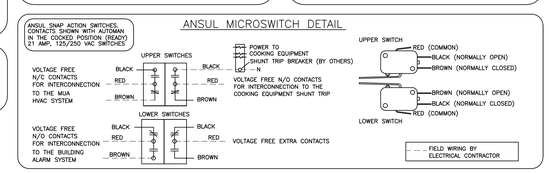

THIS DRAWING MUST BE CHECKED, SIGNED AND RETURNED TO THE APPROPRIATE FACTORY REPRESENTATIVE BEFORE PRODUCTION PLEASE NOTE:

1. ALL DIMENSIONAL INFORMATION, MOUNTING POSITIONS AND CLEARANCES.
2. THE LOCATION AND TYPE OF COOKING EQUIPMENT.

NOTE TO APPROVER

ANY CHANGES TO COOKING EQUIPMENT SUCH AS INCREASED ENERGY INPUTS OR EQUIPMENT POSITION MAY AFFECT EXHAUST AIRFLOW. HALTON MUST BE NOTIFIED IF ANY CHANGES OCCUR, A RECALCULATION EXHAUST AIRFLOW MAY BE REQUIRED.

☐ REVISE AND RESUBMIT

APPROVED FOR FABRICATION
☐ WITH NO CHANGES ☐ WITH CHANGES AS NOTED

APPROVED BY _____ DATE _____

MAIL APPROVED DRAWINGS TO APPROPRIATE FACTORY BELOW: | WEBSITE: WWW.HALTONCOMPANY.COM

HALTON CO. (USA)
101 INDUSTRIAL DRIVE
SCOTTSVILLE, KY 42164
1-270-237-5600

HALTON CO. (CANADA)
1021 BREVIK PLACE L4W 3R7
MISSISSAUGA, ON
1-905-624-0301

REV.	REVISION DESCRIPTION	BY	DATE
1	REVISED TO PIRANHA	BM	03.06.17
2	NO CHANGE	CG	03.08.17
3	REVISED HOOD LAYOUT	AG	07.07.17
4	REVISED ITEM NUMBERS	WU	07.12.17
5	REVISED HOOD NUMBERS	AG	07.17.17
6	REV WALL, SHIFTED EQUIP ON 54B OVERHANG, REV WIDTH OF 54C/D	WU	07.18.17
7	REVISED PROJECT TITLE AND WALL DIMENSIONS	AG	10.05.17

PROJECT: WESTERN STATE HOSPITAL
LOCATION: WASHINGTON | DRAWN BY: CG | DATE: 02.28.17
SCALE: NOT TO SCALE
CONSULTANT: HALLIDAY ASSO

Halton

DRAWING TITLE: FIRE SYSTEM DETAILS
DRAWING No.: U17-165
REV. NO.: 7 | SHEET NO.: 2 of 6

©2016 NAC/HC

REVISIONS

CONFORMED SET

HALLIDAY ASSOCIATES
656 NW NORWOOD CANAL, WASH. 98027
360 . 834 . 6657
FAX 360 . 834 . 5435
FOOD FACILITY CONSULTANTS SPACE PLANNING + DESIGN

FCSI FOUNDATIONAL MEMBER LAURA L. BOLLAND TOTAL FACILITY CONSULTANTS SOLUTIONS

Western State Hospital
BUILDING 22, PATIENT SUPPORT CENTER
PATIENT SUPPORT CENTER
9601 STEILACOOM BLVD SW, LAKEWOOD, WASHINGTON 98498-7213

NAC ARCHITECTURE
nacarchitecture.com
2025 FIRST AVE | SUITE 300
SEATTLE WA 98121
P:206.441.4522

DSHS NO	2016-410G(2-1)
NAC NO	121-16004
DRAWN	LB/SH
CHECKED	LB
DATE	03/16/2018

FIRST FLOOR FOOD SERVICE CANOPY HOOD DETAILS

FS3.02

1 FIRST FLOOR - FOOD SERVICE CANOPY HOOD DETAILS
Scale: NONE

REVISIONS

HOOD INFORMATION TABLE

HOOD NUMBER	HOOD MODEL	EXHAUST AIR FLOW REQUIREMENTS						GREASE EXTRACTOR				HOOD CONSTRUCTION	HOOD WEIGHT (LBS)
		EXHAUST CFM	T.A.B. PORT STATIC PRESSURE	TOTAL HOOD STATIC PRESSURE	EXHAUST COLLAR			QTY.	SIZE		TYPE		
					QTY.	LENGTH	WIDTH		L	H			
72A	KVE	1858	.28"	.39"	1	13"	12"	5	20"	13"	KSA	ALL 18GA. 304 S.S.	765
								–	11"	13"			
72B	KVE	1880	.29"	.40"	1	13"	12"	5	20"	13"	KSA	ALL 18GA. 304 S.S.	758
								–	11"	13"			
85A	KVE	2070	.35"	.46"	1	14"	12"	5	20"	13"	KSA	ALL 18GA. 304 S.S.	945
								–	11"	13"			
85B	KVE	2503	.35"	.46"	1	17"	12"	6	20"	13"	KSA	ALL 18GA. 304 S.S.	1050
								–	11"	13"			

TOTAL EXH. CFM = 8311

CAPTURE JET CLEARANCE DETAIL

Capture Jet® Fan Cover Clearance

Patented Capture Jet® technology perimeter air jets improve capture and containment of heat and grease emissions. It is very important to leave air space above and around the Capture Jet® air intake cover on the top of the Halton hood. Please leave 2 inches of clearance on the top and sides of the perforated Capture Jet® intake cover to allow unimpeded entrance of air into the Capture Jet® fan.

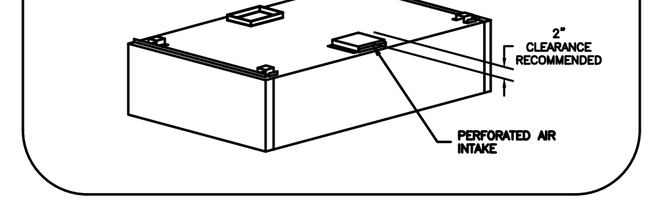

ELECTRICAL CONNECTION SCHEDULE

CONNECTION #	CONNECTION DESCRIPTION	FROM	TO
E1–H	120V, 15AMP – HOOD LIGHT POWER – 3 WIRES	BUILDING SOURCE	HOOD 72A
E2–H	FIELD CONNECTION FOR HOOD LIGHTS	HOOD 72A	HOOD 72B
E3–H	FIELD CONNECTION FOR HOOD LIGHTS	HOOD 72B	HOOD 85A
E4–H	FIELD CONNECTION FOR HOOD LIGHTS	HOOD 85A	HOOD 85B

NOTE:
FILLER PANEL TO BE PROVIDED AND INSTALLED BY KITCHEN EQUIPMENT CONTRACTOR.

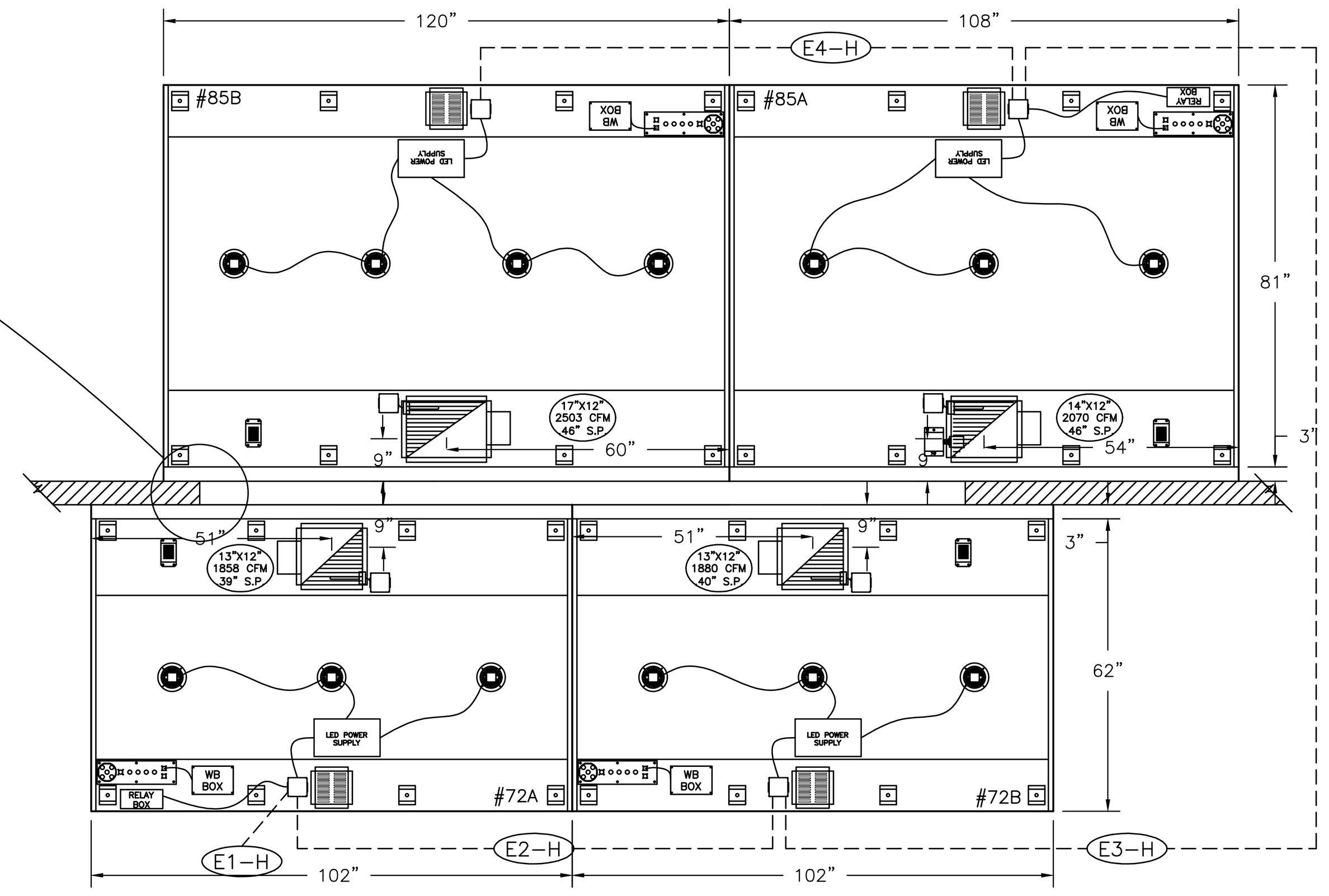

1 ITEM # 72
PLAN VIEW

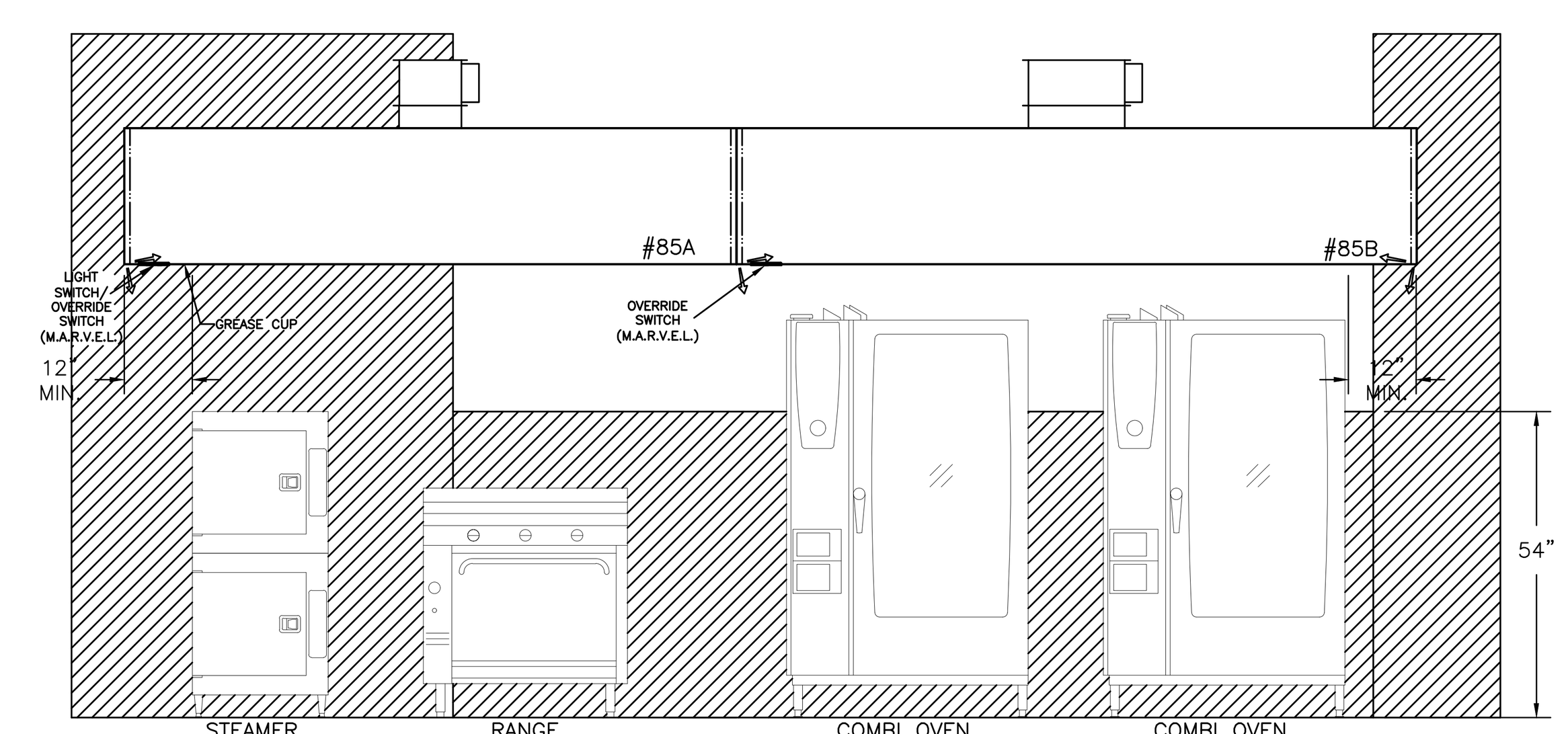

3 ITEM # 85
ELEVATION VIEW

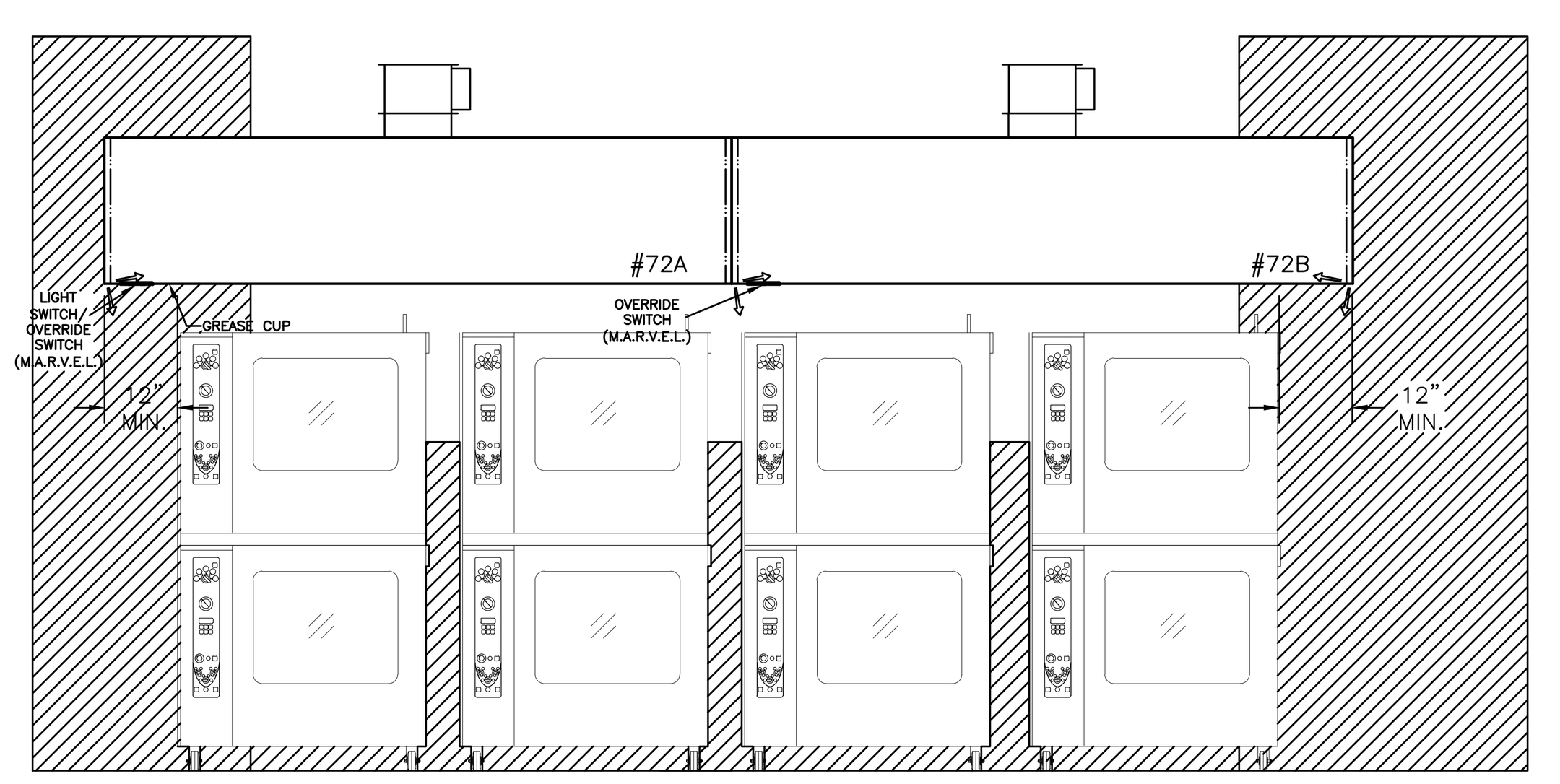

2 ITEM # 72
ELEVATION VIEW

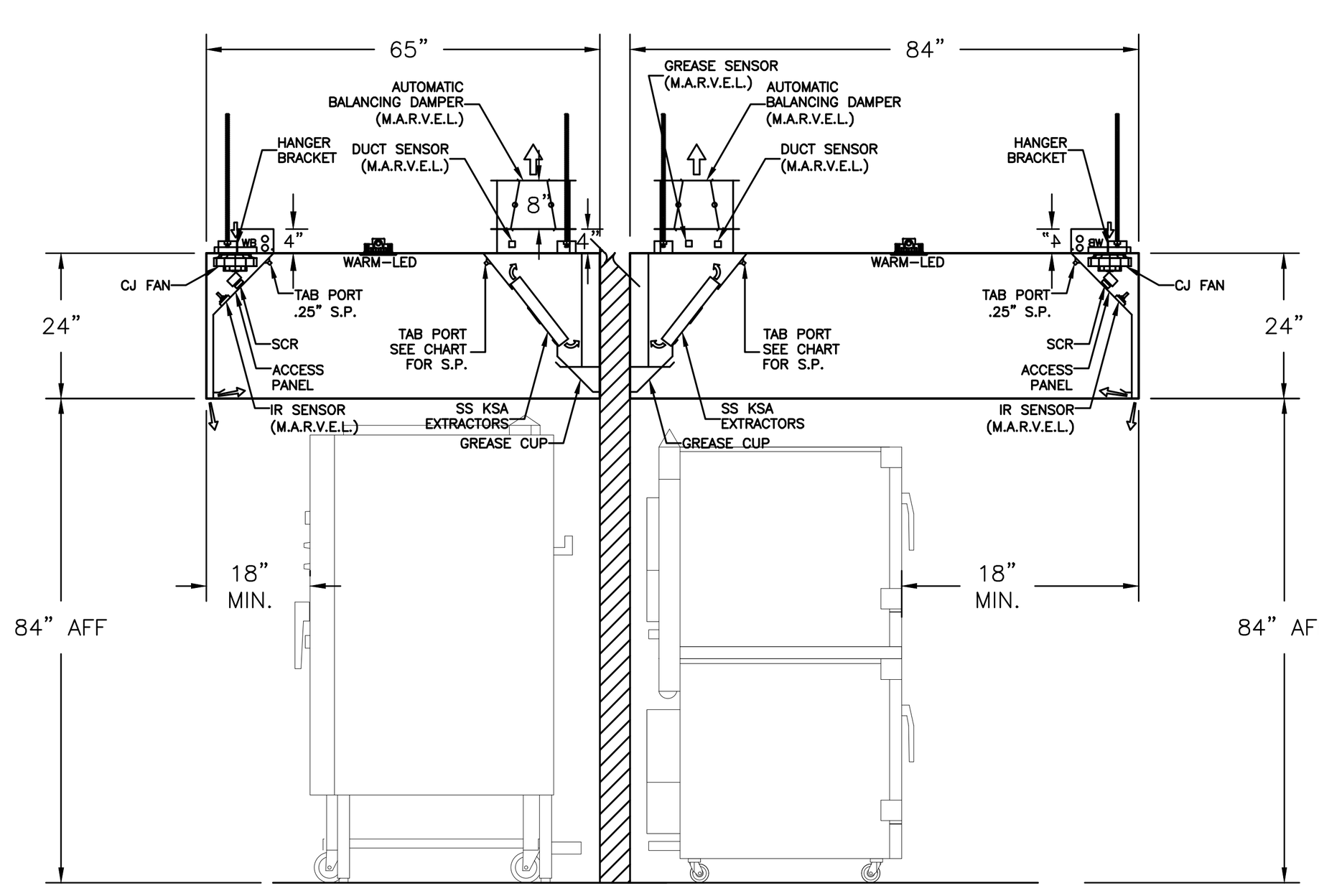

4 ITEM # 72/85
SECTION VIEW

GENERAL SPECIFICATIONS

1– HOOD CONSTRUCTION AND DESIGN MEETS NFPA 96 AND UL 710 STANDARD.

2– HOOD IS NSF AND ETL LISTED UNDER THE FOLLOWING FILE NUMBER: ETL #3085193CLE–002

3– ALL INSTALLATION WORK IS TO BE PERFORMED BY QUALIFIED PERSONS AND IN ACCORDANCE WITH STATE AND LOCAL BUILDING CODE REQUIREMENTS.

4– THE INSTALLATION SHALL BE IN ACCORDANCE WITH NFPA 96, REMOVAL OF SMOKE AND GREASE LADEN VAPORS FROM COMMERCIAL COOKING EQUIPMENT.

5– ALL EXHAUST DUCTWORK AND TRANSITIONS ARE TO BE PROVIDED BY THE HVAC CONTRACTOR.

6– CLEARANCE FROM HOOD AND DUCTS TO COMBUSTIBLE MATERIAL SHALL BE PER APPLICABLE BUILDING CODES.

7– FOR PROPER OPERATION OF THE HOOD SYSTEM, IT IS THE RESPONSIBILITY OF THE GENERAL CONTRACTOR TO HAVE THE HOOD BALANCED AND TESTED TO ENSURE THAT THE EXHAUST AND SUPPLY REQUIREMENTS OF THE HOOD ARE MET.

INSTALLATION REQUIREMENTS

KITCHEN EQUIPMENT CONTRACTOR'S REQUIREMENTS

1– PROVIDE DRAWINGS TO APPROPRIATE TRADES REFERENCING UTILITY SERVICE AND COORDINATE FINAL CONNECTION.

2– DELIVER, ASSEMBLE AND INSTALL HALTON SYSTEM PER DRAWING.

3– FURNISH WIRING AND PLUMBING DIAGRAMS TO END USER.

4– THE K.E.C MUST INFORM HALTON OF ANY CHANGES IN EQUIPMENT OR BUILDING STRUCTURE. FIELD MODIFICATIONS ARE THE RESPONSIBILITY OF THE K.E.C.

5– IF HALTON MANUAL EXHAUST VOLUME DAMPERS ARE PROVIDED, THE K.E.C. IS RESPONSIBLE FOR THEIR INSTALLATION OR TO MAKE ARRANGEMENTS WITH OTHER TRADES FOR THEIR INSTALLATION.

6– IF HALTON MODEL KVL BACKSHELF STYLE HOODS ARE PROVIDED, THE K.E.C. IS RESPONSIBLE FOR THE INSTALLATION OF THE CAPTURE–JET FAN.

ELECTRICAL CONTRACTOR'S REQUIREMENTS

1– PROVIDE AND CONNECT ALL REQUIRED VOLTAGES, CONNECTORS, WIRING, CONDUIT, ETC., PER NEC AND ALL APPLICABLE LOCAL CODES.

ELECTRICAL EQUIPMENT REQUIREMENTS

FLUORESCENT LIGHT FIXTURE 40 WATT MAX BULB= .67 AMP EA.

RECESSED INCANDESCENT LIGHT FIXTURE 150 WATT MAX BULB= 1.25 AMP EA.

GLOBE INCANDESCENT LIGHT FIXTURE 100 WATT MAX BULB= .83 AMP EA.

LED LIGHT FIXTURES= .30 AMP EA.

CAPTURE JET FAN= .72 AMP EA

ALL HOOD CIRCUITS ARE NOT TO EXCEED 15 AMP

LIGHT BULBS, IF REQUIRED, ARE TO BE PROVIDED BY OTHERS

CEILING HEIGHT NOTE

IF HALTON COMPANY IS TO PROVIDE CEILING CLOSURE PANELS, THE EXACT DIMENSION OF THE FINISHED CEILING HEIGHT MUST BE PROVIDED PRIOR TO RELEASE.

FINISHED CEILING HEIGHT A.F.F.: ______________

PERFORMANCE CRITERIA

OTHER MANUFACTURERS WISHING TO OFFER AN ALTERNATE TO THE SPECIFIED MANUFACTURER MUST APPLY FOR PERMISSION TO DO SO IN WRITING FROM THE OFFICE OF THE SPECIFYING CONSULTANT. APPLICATION MUST BE RECEIVED BY THE CONSULTANT AT LEAST TEN WORKING DAYS PRIOR TO THE BID DATE. ANY ALTERNATE SYSTEM MUST MEET CONSTRUCTION AND PERFORMANCE REQUIREMENTS AND EFFICIENCIES AS OUTLINED IN THIS SPECIFICATION.

REQUESTS FOR APPROVAL MUST INCLUDE GREASE FILTRATION PERFORMANCE DATA (MICRON SIZE VS. EXTRACTION EFFICIENCY) AND MANUFACTURERS OWN EXHAUST AIR FLOW CALCULATIONS BASED ON THE CONVECTIVE HEAT LOAD OF COOKING EQUIPMENT BENEATH THE HOOD.

EFFICIENCY COMPARISON DATA TO BE PERFORMED IN ACCORDANCE WITH THE MOST CURRENT ASTM STANDARD F1704 AND INCLUDE RESULTS FOR THE REQUIRED CAPTURE AND CONTAINMENT EXHAUST AIR FLOW IN ACCORDANCE WITH THE "TEST METHOD TO DETERMINE THE THRESHOLD OF CAPTURE AND CONTAINMENT." DATA MUST INCLUDE THERMAL IMAGING RESULTS VALIDATING CONFORMANCE TO ASTM F1704 AND SUPPLY AIR TEMPERATURE REQUIREMENT OF 74°F.

MAKE UP AIR WILL BE CALCULATED SO THAT THE SAME AMOUNT OF AIR WILL BE TAKEN FROM THE ZONE AS IS REQUIRED BY THE SPECIFIED SYSTEM. AN ADDITIONAL LOAD CANNOT BE PLACED ON THE KITCHEN HVAC SYSTEM.

MANUFACTURER MUST PROVIDE A WRITTEN GUARANTEE OF PERFORMANCE, ENSURING THE SPECIFYING ENGINEER THAT THE SYSTEM WILL PERFORM TO THE ENGINEER'S SATISFACTION WHEN INSTALLED AND BALANCED ACCORDING TO DESIGN AIR FLOWS AND RESULTS OF ASTM STANDARD F1704 TEST. (AS DETERMINED BY TAB PORTS AND PRESSURE VS. AIR FLOW CURVES.) CONSULTANT RESERVES THE RIGHT TO REJECT ANY SYSTEM WHICH, WHEN INSTALLED, DOES NOT PROVIDE CAPTURE AND CONTAINMENT AT THE THRESHOLD FLOW RATE DETERMINED IN ASTM F1704. REJECTED SYSTEM MUST BE REPLACED WITH SPECIFIED SYSTEM, WITH ALL REPLACEMENT COSTS PAID BY MANUFACTURER OF REJECTED SYSTEM.

ANY CHANGES IN THE SPECIFIED SIZING OF POWER WIRING, FAN SIZE, HORSEPOWER REQUIREMENTS, OR GAS LINES DUE TO THE USE OF ANY SYSTEM OTHER THAN THAT WHICH IS SPECIFIED IS THE RESPONSIBILITY OF THE ALTERNATE HOOD MANUFACTURER, AND MUST BE COORDINATED BY THE HOOD MANUFACTURER AND CONTRACTORS INVOLVED.

LED POWER SUPPLY UNIT

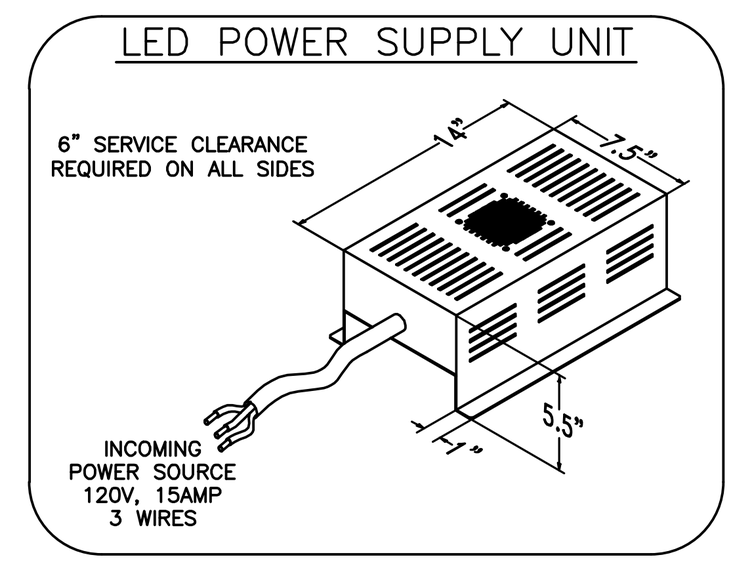

Typical wiring of Capture–Jet fan W/HALTON SUPPLIED SWITCH PANEL

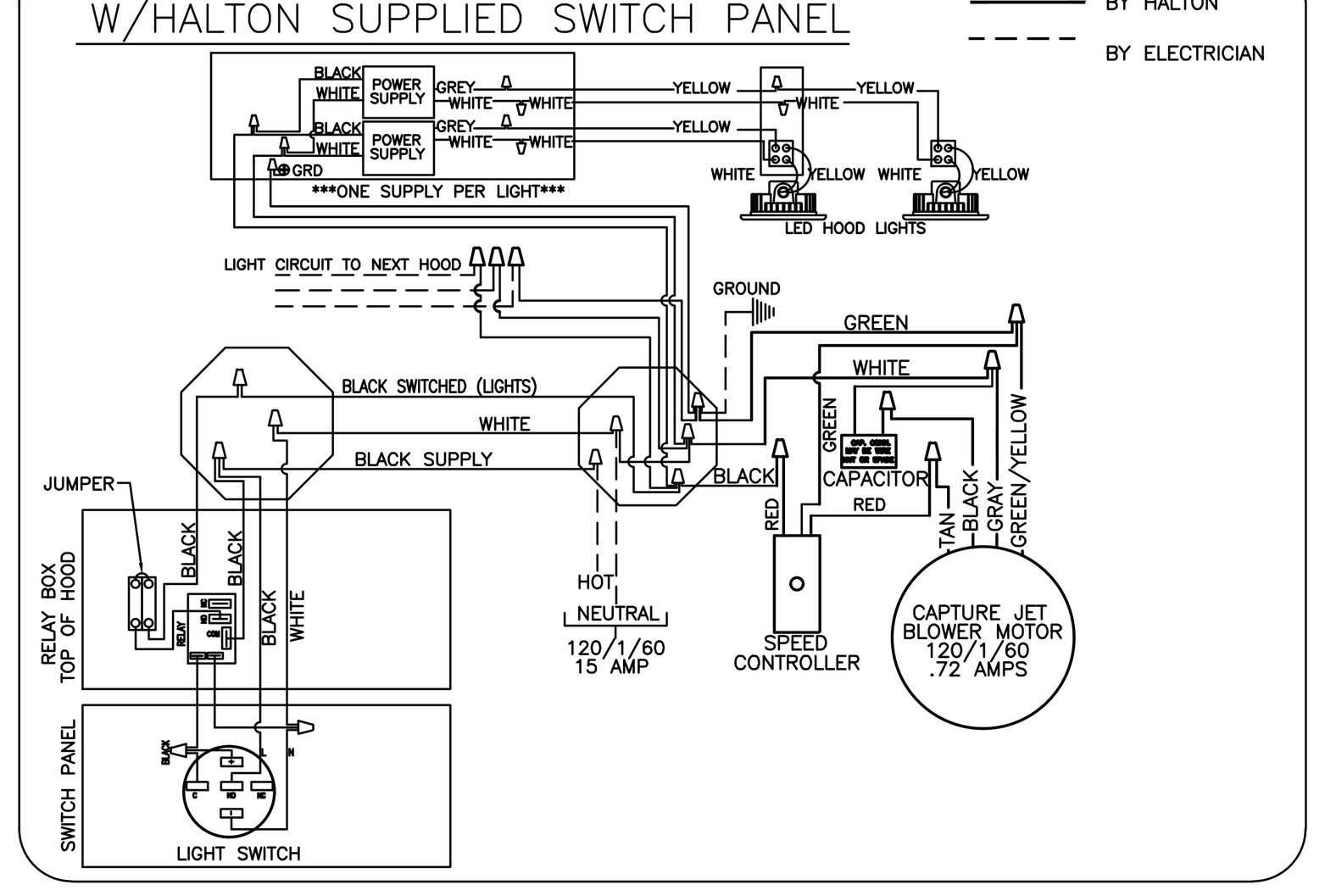

EXHAUST VOLUME DAMPER

MODEL: ABD (Automatic Balancing Damper)

TAG	"L"	"W"	QUANTITY	CONSTRUCTION*
72A	13"	12"	1	304 S.S.
72B	13"	12"	1	304 S.S.
85A	14"	12"	1	304 S.S.
85B	17"	12"	1	304 S.S.
–	–	–	–	–
–	–	–	–	–

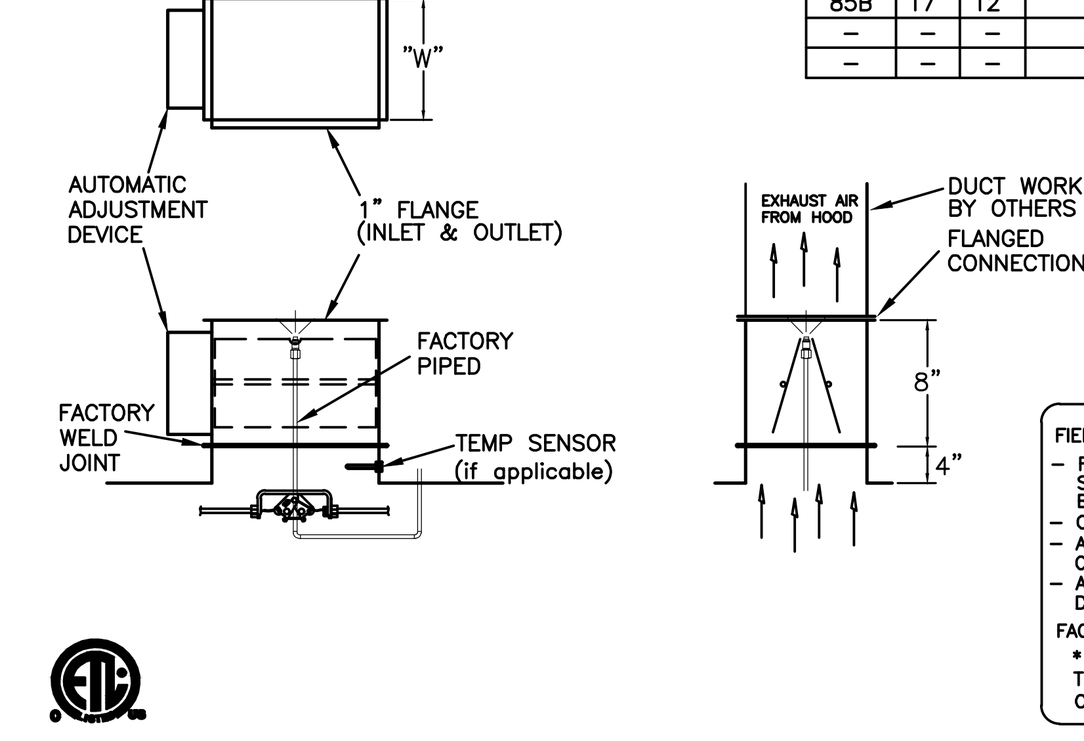

GENERAL NOTES

FIELD NOTES:
– FLANGED FIELD CONNECTION REQUIRED. SLEEVED CONNECTION WILL CAUSE DAMPER BLADES TO BIND.
– CONNECTIONS TO MEET NFPA96 REQUIREMENTS.
– ANSUL COMPONENTS SHOWN FOR REFERENCE ONLY (UNLESS ORDERED WITH HOODS).
– ADEQUATE ACCESS MUST BE PROVIDED TO DAMPERS FOR FUTURE SERVICING.

FACTORY NOTES:
* CONSTRUCTION OF DAMPER MUST MATCH THE THE UNEXPOSED CONSTRUCTION OF THE CORRESPONDING HOOD.

HANGER BRACKET LAYOUT

HOODS 96"L – 168"L WITH ONE EXHAUST COLLAR

HOODS 95"L & LESS WILL NOT HAVE THE FOUR BRACKETS IN THE CENTER OF HOOD

HOODS 96"L – 168"L WITH TWO EXHAUST COLLARS

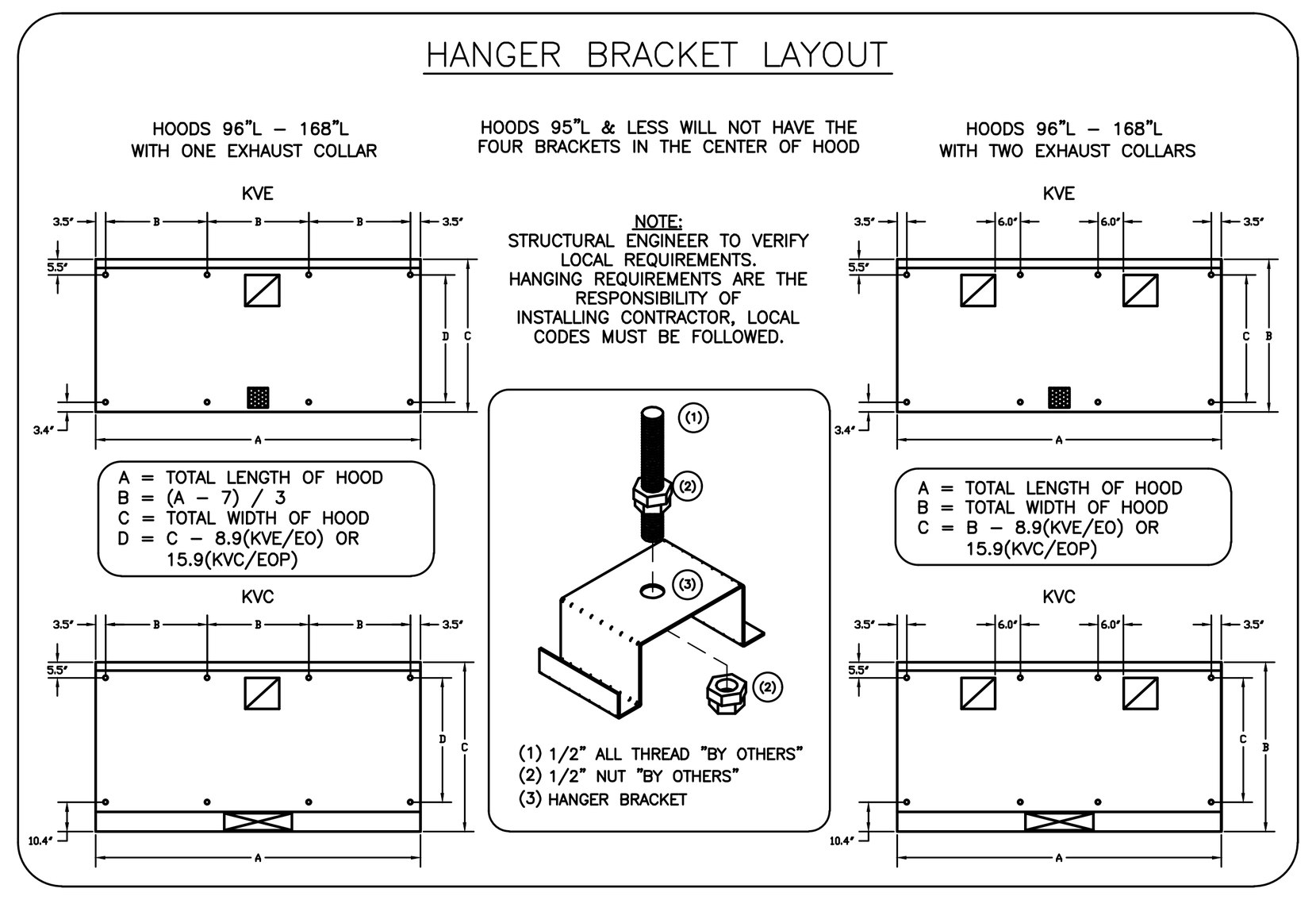

KSA GREASE EXTRACTOR

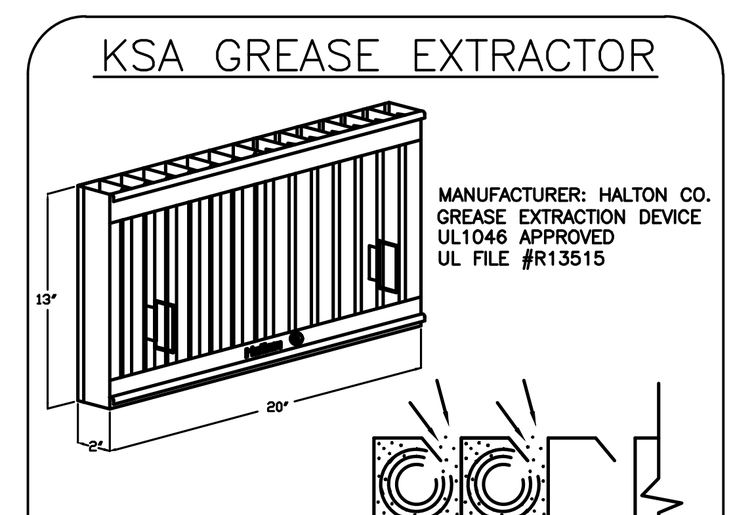

EFFECTIVE AREA = 1.25 SQUARE FEET PER FULL EXTRACTOR
EFFECTIVE AREA = 0.75 SQUARE FEET PER HALF EXTRACTOR
SEE HOOD SUBMITTAL DRAWINGS FOR EXTRACTOR QUANTITY

EXTRACTION OF CONTAMINANTS FROM THE EXHAUST AIR IS PROVIDED BY THE KSA MULTI–CYCLONE GREASE EXTRACTORS. EFFICIENT GREASE EXTRACTION IS ACHIEVED BY FORCING THE EXHAUST AIR TO SPIRAL CONTINUOUSLY IN THE SAME DIRECTION IN THE MULTIPLE CHAMBERS OF THE EXTRACTOR, THUS SEPARATING THE GREASE PARTICLES FROM THE AIR FLOW CENTRIFUGALLY.
HIGH EXTRACTION EFFICIENCY AND LOW PRESSURE LOSS OVER THE KSA REMAIN PRACTICALLY CONSTANT.

KSA REMOVAL TOOL

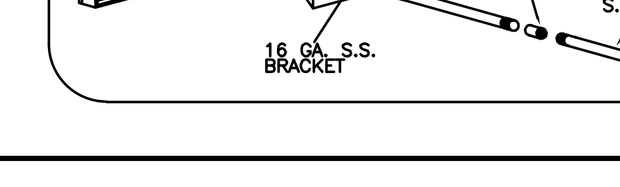

THIS DRAWING MUST BE CHECKED, SIGNED AND RETURNED TO THE APPROPRIATE FACTORY. PLEASE VERIFY THE FOLLOWING:
1. ALL DIMENSIONAL INFORMATION, MOUNTING POSITIONS AND CLEARANCES.
2. THE LOCATION AND TYPE OF COOKING EQUIPMENT.

NOTE TO APPROVER
ANY CHANGES IN COOKING EQUIPMENT SUCH AS INCREASED ENERGY INPUTS OR EQUIPMENT POSITION MAY AFFECT EXHAUST AIRFLOW. HALTON MUST BE NOTIFIED IF ANY OF THESE CHANGES OCCUR, A RECALCULATION EXHAUST AIRFLOW MAY BE REQUIRED.

☐ REVISE AND RESUBMIT

APPROVED FOR FABRICATION
☐ WITH NO CHANGES ☐ WITH CHANGES AS NOTED

APPROVED BY ______ DATE

COMPLIES WITH LATEST NFPA–96

MAIL APPROVED DRAWINGS TO APPROPRIATE FACTORY BELOW: WEBSITE: WWW.HALTONCOMPANY.COM

HALTON CO. (CANADA)
1021 BREVIK PLACE
MISSISSAUGA, ON L4W 3R7
1–905–624–0301

HALTON CO. (USA)
101 INDUSTRIAL DRIVE
SCOTTSVILLE, KY 42164
1–270–237–5600

REV.	REVISION DESCRIPTION	BY	DATE
1	ADDED M.A.R.V.E.L.	BM	03.06.17
2	NO CHANGE	CG	03.08.17
3	REVISED HOOD LAYOUT	AG	07.07.17
4	REVISED ITEM NUMBERS AND ADDED WALL	WU	07.12.17
5	REVISED HOOD DIMENSIONS	AG	07.17.17
6	REVISED WALL ORIENTATION	WU	07.18.17
7	REVISED PROJECT TITLE	AG	10.05.17

PROJECT:
WESTERN STATE HOSPITAL
LOCATION: WASHINGTON
DRAWN BY: CG DATE: 02.28.17
SCALE: NOT TO SCALE
CONSULTANT: HALLIDAY ASSO

Halton

DRAWING TITLE:
HOOD DETAILS

DRAWING No.:
U17–165

REV. NO.: 7 SHEET NO.: 3 of 6

CONFORMED SET

HALLIDAY ASSOCIATES
656 NW NORWOOD
CAMAS, WASH. 98607
360 – 834 – 6657
FAX 360 – 834 – 5453
FOOD FACILITY CONSULTANTS
SPACE PLANNING ▪ DESIGN

PROFESSIONAL MEMBER LAURA L. BOURLAND FCSI 700794 FOODSERVICE CONSULTANTS SOCIETY INTERNATIONAL

Western State Hospital
BUILDING 22, PATIENT SUPPORT CENTER
PATIENT SUPPORT CENTER
9601 STEILACOOM BLVD SW, LAKEWOOD, WASHINGTON 98498-7213

NAC ARCHITECTURE
nacarchitecture.com
2025 FIRST AVE | SUITE 300
SEATTLE WA 98121
P:206.441.4522

© 2016 NAC inc

DSHS NO	2016-410G(2-1)
NAC NO	121-16004
DRAWN	LB/SH
CHECKED	LB
DATE	03/16/2018

FIRST FLOOR FOOD SERVICE CANOPY HOOD DETAILS

FS3.03

1 FIRST FLOOR - FOOD SERVICE CANOPY HOOD DETAILS
Scale: NONE

ANSUL PIRANHA FIRE SUPPRESSION SYSTEM
FIRE SYSTEM IS INTEGRAL WITH FACTORY DESIGN/PIPING/FIELD CERTIFICATION

REMOTE MOUNTED:

(1) PIRANHA 10 (REGULATED RELEASE)
(2) PIRANHA 10 (REGULATED ACTUATOR)

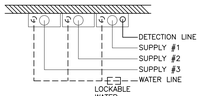

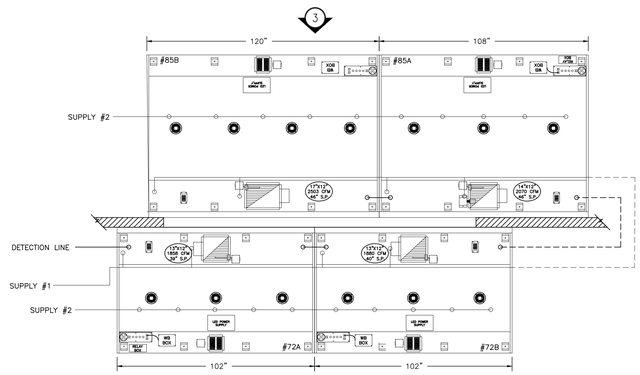

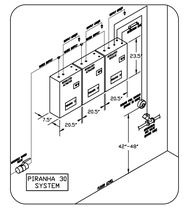

ALL APPLIANCE NOZZLES TO HAVE SWIVELS

1 ITEM # 72 PLAN VIEW

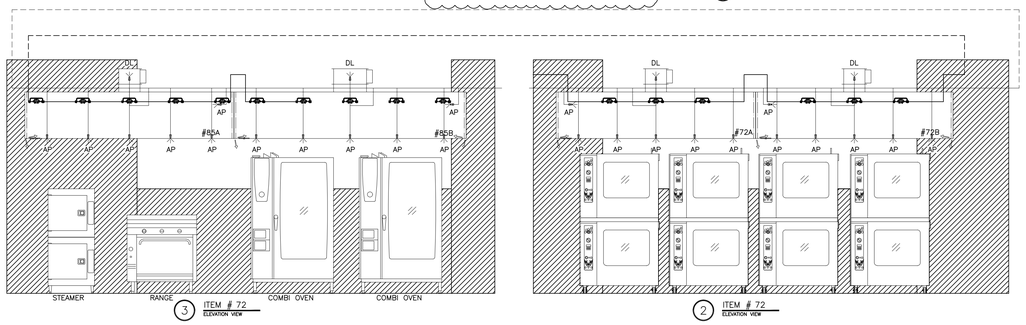

3 ITEM # 72 ELEVATION VIEW

2 ITEM # 72 ELEVATION VIEW

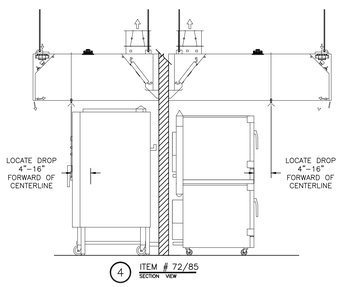

4 ITEM # 72/85 SECTION VIEW

1) 3 TANK SYSTEM (PIRANHA 30)
2) THREE TANK SYSTEM (6.75 GALLON)
3) 3/8" BLACK IRON PIPING (CONCEALED)
3/8" S.S. APPLIANCE DROPS (EXPOSED)
4) MECHANICAL GAS VALVE = (ADVISE SIZE)

FLOW POINT CHART

ANSUL PIRANHA FLOW POINT CALCULATION			
NOZZLE TYPE	NOZZLE FLOW PT.	NOZZLE QUANTITY	TOTAL FLOW PT.
DL	1	–	4
AP	1	–	24
TOTAL FLOW POINTS USED			28
MAX. SYSTEM FLOW POINTS:			30 (6 GALLON)

WATER PIPING NOTES

MAXIMUM WATER PRESSURE MUST NOT EXCEED 100 PSI IF PRESSURE EXCEEDS 100PSI, SPRINKLER CONTRACTOR SHALL PROVIDE PRESSURE REDUCING VALVE.

MINIMUM WATER PRESSURE= 19 PSI
MINIMUM WATER LINE SIZE= 1" PIPE

WATER LINE SHALL BE DESIGNED TO PROVIDE REQUIRED PRESSURE AS OUTLINED AND DETAILED IN THE ANSUL PIRANHA DESIGN MANUAL.

A FULL FLOW, LOCKED OPEN, TAMPERPROOF SHUT=OFF VALVE MUST BE LOCATED AT SYSTEM. SPRINKLER CONTRACTOR SHALL PROVIDE PIPING FROM THE SPRINKLER SYSTEM AND CONNECT TO THE AUTOMAN AND INSTALL LOCKABLE VALVE PROVIDED WITH ANSUL SYSTEM

WET SPRINKLER COMPONENT LIST

IF PIRANHA FIRE SUPPRESSION SYSTEM IS TO BE CONNECTED TO A WET SPRINKLER SYSTEM THE FOLLOWING ITEMS ARE TO BE PROVIDED BY OTHERS:

LOWPOINT DRAIN VALVE
PRESSURE RELIEF VALVE
WYE STRAINER
PRESSURE REGULATING (REDUCE) VALVE

HALTON TO PROVIDE THE FOLLOWING:

ANSUL LOCKABLE SHUTOFF VALVE
PIRANHA WATER VALVE (SHUT DOWN DEVICE)

ANY COMPONENTS OTHER THAN THOSE LISTED ABOVE TO CONNECT THE PIRANHA SYSTEM FROM THE PIRANHA REGULATED RELEASE TO THE WET SPRINKLER SYSTEM WILL NOT BE PROVIDED BY HALTON.

ANSUL NOTES

GENERAL NOTES:

1. THIS INSTALLATION IS TO BE MADE IN ACCORDANCE WITH THE PIRANHA INSTALLATION MANUAL AND IN ACCORDANCE WITH ALL STATE AND LOCAL CODES.
2. THE WIRE ROPE FOR THE DETECTOR AND REMOTE PULL STATION IS TO BE INSTALLED BY AN AUTHORIZED AND FACTORY TRAINED DISTRIBUTOR OR SERVICE REPRESENTATIVE.
3. THIS INSTALLATION IS TO BE INSPECTED, PUT INTO OPERATION AND CERTIFIED BY AN AUTHORIZED AND FACTORY TRAINED DISTRIBUTOR OR SERVICE REPRESENTATIVE.
4. ELECTRICAL CONTACTS AND WIRING FOR APPLIANCE SHUT OFF TO BE PROVIDED BY THE ELECTRICAL CONTRACTOR.
5. ANSUL PIRANHA RESTAURANT FIRE SUPPRESSION SYSTEMS HAVE BEEN TESTED AND ARE LISTED BY UNDERWRITERS' LABORATORIES INC, AS PRE-ENGINEERED SYSTEMS, AND WHEN INSTALLED AS SHOWN ON THIS DRAWING SHALL COMPLY WITH ALL RELEVANT ANSUL INSTALLATION RECHARGE, INSPECTION AND MAINTENANCE MANUALS AND SHALL COMPLY WITH NFPA 96 WHEN INSTALLED AND CERTIFIED BY AUTHORIZED TRAINED ANSUL DISTRIBUTORS IN ACCORDANCE WITH THE MANUAL.
6. ALL AGENT DISTIBUTION PIPING AND DETECTION CONDUIT HOOD PENETRATIONS MUST BE PROPERLY SEALED IN ACCORDANCE WITH NFPA 96.

DISTRIBUTION PIPING REQUIREMENT NOTES:

1. PIPE SHALL BE 3/8" SCHEDULE 40 BLACK IRON, CHROME PLATED OR STAINLESS STEEL UNLESS OTHERWISE NOTED.
2. FINAL NOZZLE LOCATION MAY NOT VARY FROM LOCATION SHOWN.

MANUAL PULL DETAIL

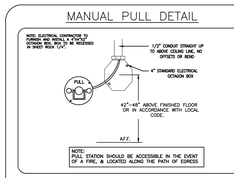

SECTION VIEW

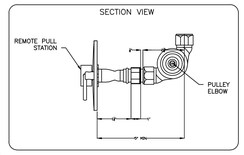

NOTE:

HALTON COMPANY WILL SUPPLY ANSUL COMPONENTS AND PRE-PIPED HOODS PER PUBLISHED ANSUL GUIDELINES AND RECOMMENDATIONS. IT IS THE RESPONSIBILITY OF THE F.S.E.C. TO INFORM HALTON OF ANY SPECIAL REQUIREMENTS OF THE LOCAL JURISDICTION PRIOR TO RELEASE OF EQUIPMENT.

NOTE:

ALL PIPING FOR LOW PROXIMITY APPLIANCE PROTECTION SHALL BE PROVIDED & INSTALLED BY THE INSTALLING ANSUL DISTRIBUTOR & NOT BY HALTON.

NOTE:

HAND HELD EXTINGUISHERS, IF REQUIRED, ARE TO BE PROVIDED BY OTHERS.

ANSUL MICROSWITCH DETAIL

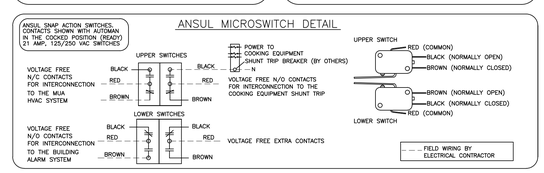

THIS DRAWING MUST BE CHECKED, SIGNED AND RETURNED TO THE APPROPRIATE FACTORY REPRESENTATIVE BEFORE PROCEEDING WITH THE FABRICATION OF ANY EQUIPMENT.

1. ALL DIMENSIONAL INFORMATION, MOUNTING POSITIONS AND CLEARANCES.
2. THE LOCATION AND TYPE OF COOKING EQUIPMENT.

NOTE TO APPROVER:
ANY CHANGES TO COOKING EQUIPMENT SUCH AS INCREASED ENERGY INPUTS OR EQUIPMENT POSITION MAY AFFECT EXHAUST AIRFLOW. HALTON MUST BE NOTIFIED IF ANY OF THESE CHANGES OCCUR, A RECALCULATION EXHAUST AIRFLOW MAY BE REQUIRED.

☐ APPROVED FOR FABRICATION
☐ REVISE AND RESUBMIT
☐ WITH NO CHANGES ☐ WITH CHANGES AS NOTED

APPROVED BY _____ DATE _____

MAIL APPROVED DRAWINGS TO APPROPRIATE FACTORY BELOW:

HALTON CO. (CANADA)
1021 BREVIK PLACE L4W 3R7
MISSISSAUGA, ON
1-905-624-0301

HALTON CO. (USA)
101 INDUSTRIAL DRIVE
SCOTTSVILLE, KY 42164
1-270-237-5600

WEBSITE: WWW.HALTONCOMPANY.COM

REV.	REVISION DESCRIPTION	BY	DATE
1	REVISED TO PIRANHA	BM	03.06.17
2	NO CHANGE	CG	03.08.17
3	REVISED HOOD LAYOUT	AG	07.07.17
4	REVISED ITEM NUMBERS AND ADDED WALL	WU	07.12.17
5	REVISED HOOD DIMENSIONS	AG	07.17.17
6	REVISED WALL ORIENTATION	WU	07.18.17
7	REVISED PROJECT TITLE	AG	10.05.17

PROJECT: WESTERN STATE HOSPITAL
LOCATION: WASHINGTON
DRAWN BY: CG
DATE: 02.28.17
SCALE: NOT TO SCALE
CONSULTANT: HALLIDAY ASSO

Halton

DRAWING TITLE: FIRE SYSTEM DETAILS
DRAWING No.: U17-165
REV. NO.: 7
SHEET NO.: 4 of 6

© 2016 NAC/Inc.

REVISIONS

CONFORMED SET

HALLIDAY ASSOCIATES
656 NW NORWOOD CANAL, WASH. 98027
360 - 834 - 6857
FAX 360 - 834 - 5453
FOOD FACILITY CONSULTANTS SPACE PLANNING + DESIGN

Western State Hospital
BUILDING 22, PATIENT SUPPORT CENTER
PATIENT SUPPORT CENTER
9901 STEILACOOM BLVD SW, LAKEWOOD, WASHINGTON 98498-7213

NAC ARCHITECTURE
nacarchitecture.com
2025 FIRST AVE | SUITE 300
SEATTLE WA 98121
P:206.441.4522

DSHS NO 2016-410G(2-1)
NAC NO 121-16004
DRAWN LB/SH
CHECKED LB
DATE 03/16/2018

FIRST FLOOR FOOD SERVICE CANOPY HOOD DETAILS

FS3.04

1 FIRST FLOOR - FOOD SERVICE CANOPY HOOD DETAILS
Scale: NONE

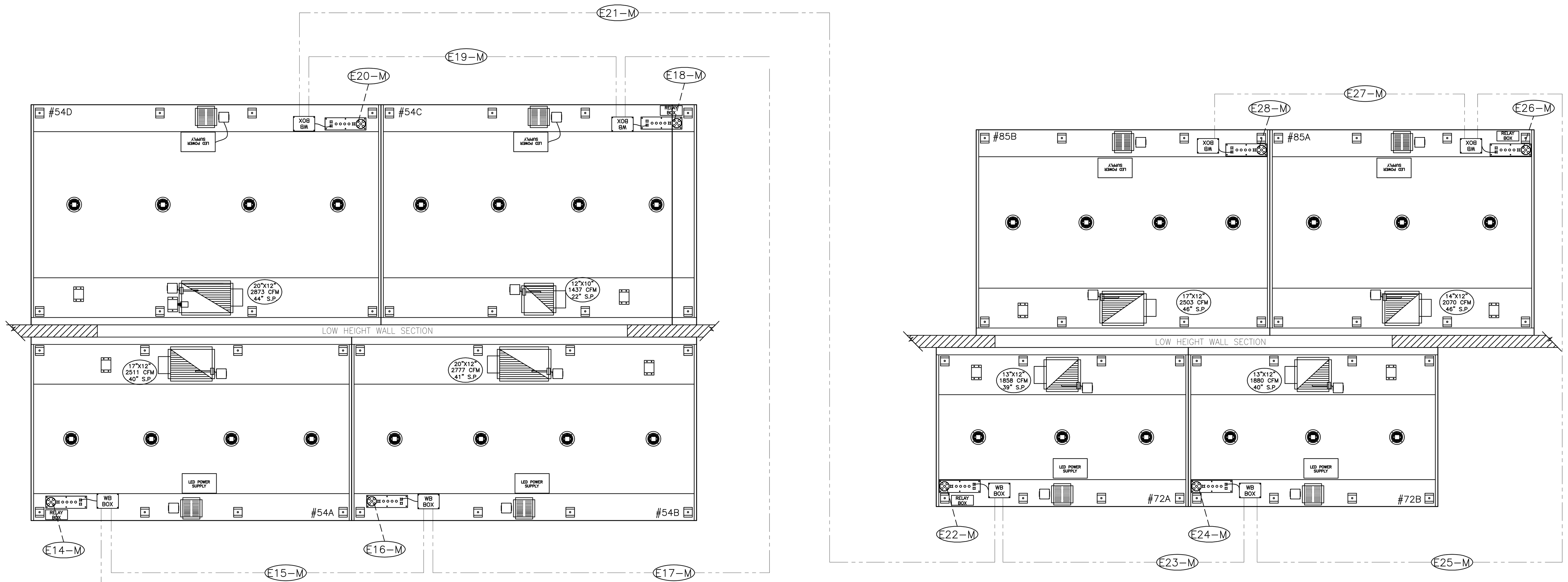

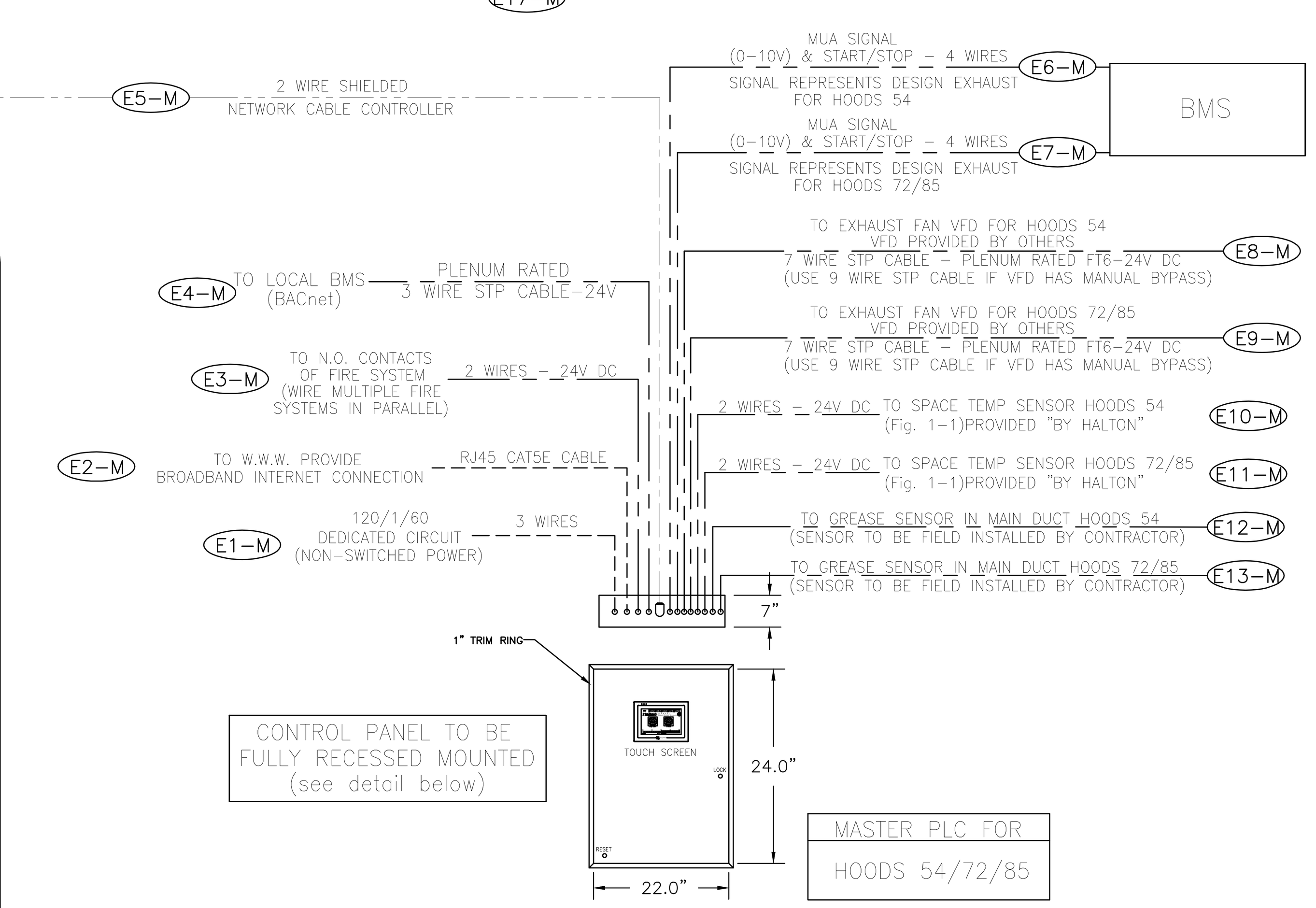

CONTROL PANEL TO BE FULLY RECESSED MOUNTED (see detail below)

MASTER PLC FOR HOODS 54/72/85

FAN CONFIGURATION DATA FOR M.A.R.V.E.L.

Exhaust Data:

EF Item #:________ Voltage/Phase/Hertz: ____/__/____
EF HP: ________
Hood Item #'s connected to this fan: ____________

EF Item #:________ Voltage/Phase/Hertz: ____/__/____
EF HP: ________
Hood Item #'s connected to this fan: ____________

EF Item #:________ Voltage/Phase/Hertz: ____/__/____
EF HP: ________
Hood Item #'s connected to this fan: ____________

EF Item #:________ Voltage/Phase/Hertz: ____/__/____
EF HP: ________
Hood Item #'s connected to this fan: ____________

Make Up Air Data:

Quantity of MUA "Zones":________
Hood Item #'s located in Zone 1: ____________
Hood Item #'s located in Zone 2: ____________

NOTE: Above information must be completed in full prior to project being released for production. If more than four exhaust fans or two MUA zones are being used, please provide this data as well.

M.A.R.V.E.L. Standard Sequence of Operation

M.A.R.V.E.L. I
Standard Sequence
Start up & shut down • Off • Idle • Cooking or active mode Make up air • 0-10V Output Fire system sequence Standard override feature

M.A.R.V.E.L. II
Standard Sequence
Same sequence as M.A.R.V.E.L. I as well as •ABD adjustment Make up air •Single 0-10Vor split signal

M.A.RV.E.L. Plus
Standard Sequence
Same sequence as M.A.R.V.E.L. II as well as • Output to BMS 0-10V, split or whole • Output to VAV Boxes

GREASE SENSOR LOCATION MATRIX

GREASE SENSOR #	LOCATION
1	MAIN DUCT
2	54D
3	MAIN DUCT
4	85A
5	–
6	–
7	–
8	–
9	–
10	–

NOTES:

ALL FIELD WIRING AND CONNECTION POINTS ARE SUBJECT TO CHANGE DUE TO ELECTRICAL COMPONENT(S) UPDATE OR OBSOLESCENCE. HALTON WILL NOT BE LIABLE FOR ANY CHANGE ORDERS BASED ON DRAWINGS CREATED ONE OR MORE YEARS PRIOR TO PRODUCTION. WHEN RELEASED AN UPDATED SET OF ELECTRICAL DIAGRAMS(S) WILL BE SUPPLIED.

CONNECTIVITY NOTES:

- IF COMMUNICATION WITH BUILDING MANAGEMENT SYSTEM (BMS) IS TO BE VIA BACNET, THE USE OF A PROTOCESSOR WILL BE REQUIRED.
  - THIS DEVICE IS DEFAULTED TO COMMUNICATE AS A SLAVE DEVICE.
  - THIS DEVICE CAN BE CONFIGURED EITHER AS MSTP OR IP.
- IF COMMUNICATION WITH BUILDING MANAGEMENT SYSTEM (BMS) IS TO BE VIA MODBUS:
  - THE HALTON PLC WILL BE DEFAULTED AS THE MODBUS MASTER.
  - THE DEVICE WILL BE CONFIGURED AS MSTP.

M.A.R.V.E.L. SCOPE OF WORK

RESPONSIBILITY TO BE SELECTED BY GENERAL CONTRACTOR

DEFINITIONS FOR REFERENCE:

M.A.R.V.E.L. I SYSTEMS = 1 EXHAUST FAN SERVING 1 KITCHEN HOOD

M.A.R.V.E.L. II SYSTEMS = 1 EXHAUST FAN SERVING MULTIPLE KITCHEN HOODS

VFD = VARIABLE FREQUENCY DRIVES

CONNECTION LOCATIONS WILL VARY PER SYSTEM, REFER TO HALTON M.A.R.V.E.L. DIAGRAMS FOR SPECIFICS

1. APPLICABLE CONTRACTOR IS RESPONSIBLE FOR THE INSTALLATION OF THE M.A.R.V.E.L. CONTROL PANEL. LOCATION TO BE DETERMINED BY GC AND SHALL BE WITHIN SAME SPACE AS THE KITCHEN HOODS BEING SERVED BY PANEL. (M.A.R.V.E.L. I HOOD SYSTEMS WILL NOT HAVE SUCH PANEL)
2. APPLICABLE CONTRACTOR TO SUPPLY AND INSTALL 115V (15AMP) DEDICATED CIRCUIT AT M.A.R.V.E.L. CONTROL PANEL
3. APPLICABLE CONTRACTOR TO SUPPLY AND INSTALL RJ45 CAT5E CABLE CONNECTION AT M.A.R.V.E.L. CONTROL PANEL FOR M.A.R.V.E.L. II SYSTEMS OR AT KITCHEN HOOD FOR M.A.R.V.E.L. I SYSTEMS FOR I.P. ADDRESS.
4. APPLICABLE CONTRACTOR TO INSTALL SPACE TEMP SENSOR (SUPPLIED BY HALTON) IN SAME SPACE AS KITCHEN HOOD SYSTEM AND 48"-54" A.F.F. NEAREST MUA T-STAT.
5. APPLICABLE CONTRACTOR SHALL SUPPLY AND RUN 2 WIRE 24V DC CONNECTION FROM SPACE TEMP SENSOR TO M.A.R.V.E.L. CONTROL PANEL (M.A.R.V.E.L. II) OR TO KITCHEN HOOD (M.A.R.V.E.L. I)
6. APPLICABLE CONTRACTOR TO SUPPLY AND RUN 2 WIRE 24V DC WIRING FROM ANSUL FIRE SYSTEM EITHER TO M.A.R.V.E.L. CONTROL PANEL (M.A.R.V.E.L. II) OR TO KITCHEN HOOD (M.A.R.V.E.L. I).
7. APPLICABLE CONTRACTOR SHALL CONNECT 2 WIRE COMMUNICATION CABLES (SUPPLIED BY HALTON) FROM HOOD TO HOOD AND TO PANEL AS SHOWN IN HALTON M.A.R.V.E.L. DIAGRAM.
8. APPLICABLE CONTRACTOR TO SUPPLY AND RUN 2 WIRE MUA SIGNAL (0-10V) FROM M.A.R.V.E.L. CONTROL PANEL (M.A.R.V.E.L. II) OR FROM KITCHEN HOOD (M.A.R.V.E.L. I) TO BMS OR DDC.
9. APPLICABLE CONTRACTOR TO SUPPLY AND RUN 7 WIRE STP PLENUM RATED CABLE (9 WIRE STP CABLE IF VFD IS PROVIDED WITH BYPASS) FROM M.A.R.V.E.L. CONTROL PANEL (M.A.R.V.E.L. II) OR FROM KITCHEN HOOD (M.A.R.V.E.L. I) TO EXHAUST FAN VFD(S) (VFD'S AND CABINET SUPPLIED BY HALTON UNLESS OTHERWISE NOTED)
10. APPLICABLE CONTRACTOR IS RESPONSIBLE FOR THE INSTALLATION OF THE VFD(S). LOCATION TO BE DETERMINED BY GC AND SHALL BE WITHIN 150 FEET MAX DISTANCE FROM EXHAUST FAN(S).
11. APPLICABLE CONTRACTOR TO SUPPLY AND INSTALL THREE PHASE OR SINGLE PHASE POWER FEED FROM CIRCUIT BREAKER(S) TO VFD(S). APPLICABLE CONTRACTOR TO SUPPLY AND INSTALL THREE PHASE OR SINGLE PHASE POWER FORM VFD(S) TO EXHAUST / MUA (IF APPLICABLE) MOTORS. ALL TO BE RAN IN SEPARATE CONDUIT.
12. APPLICABLE CONTRACTOR SHALL INSTALL GREASE SENSOR(S), IF PROVIDED, IN MAIN EXHAUST TRUNK, AND WIRE THE SENSOR BACK TO THE DESIGNATED LOCATION.
13. APPLICABLE CONTRACTOR TO SUPPLY AND INSTALL 115V (15AMP) DEDICATED CIRCUIT AT EACH KITCHEN HOOD. (IF HOODS ARE UV, A SECOND 115V DEDICATED CIRCUIT IS REQUIRED.)
14. INSTALLING CONTRACTOR TO BE RESPONSIBLE FOR PROVIDING ADEQUATE ACCESS TO ALL COMPONENTS LOCATED ABOVE HOOD.
15. HALTON REPRESENTATIVE TO PERFORM FINAL FIELD COMMISSIONING ONCE ALL RESPONSIBILITIES ARE COMPLETED ABOVE.

NOTES:

ALL WIRING AND CABLING TO BE PROVIDED BY ELECTRICAL CONTRACTOR UNLESS STATED OTHERWISE

NOTES:

ALL FAN MOTORS MUST BE COMPATIBLE WITH VARIABLE FREQUENCY DRIVES (VFD'S). ALL MOTORS MUST BE CONNECTED TO THREE PHASE POWER. ELECTRONICALLY COMMUTATED MOTORS (ECM) ARE ALSO ACCEPTABLE IF SINGLE PHASE POWER IS TO BE USED. (24V POWER SUPPLY TO THE ECM IS BY OTHERS)

NOTES:

ALL VARIABLE FREQUENCY DRIVES (VFD'S) MUST BE INSTALLED WITHIN 150' OF THE EXHAUST FAN.

(FIG 1-1)

GREASE SENSOR DUCT DETAIL

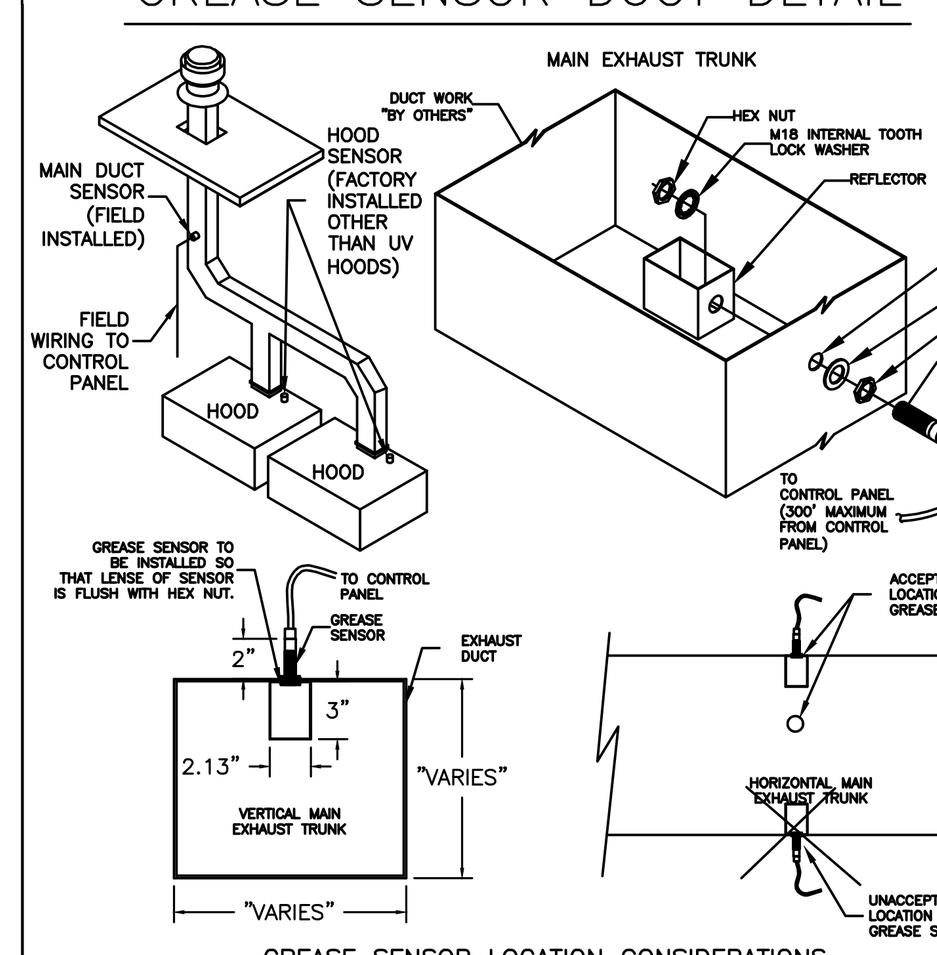

GREASE SENSOR LOCATION CONSIDERATIONS

- SENSOR MUST BE INSTALLED IN LOCATION THAT WILL BE ACCESSIBLE FOR FUTURE MAINTENANCE.
- SENSOR MUST BE INSTALLED IN LOCATION THAT IS A MINIMUM OF TWO DUCT DIAMETERS FROM A BEND OR OBSTRUCTION IN THE DUCTWORK.
- DO NOT INSTALL SENSOR IN BOTTOM OF HORIZONTAL DUCT RUN.
- SENSOR MUST BE INSTALLED WITHIN TWO FEET OF AN EXISTING DUCT ACCESS DOOR OR A NEW DUCT ACCESS DOOR MUST BE INSTALLED FOR INSTALLATION OF REFLECTOR HOUSING, LOCK WASHER, AND HEX NUT ON THE INSIDE OF THE DUCTWORK.
- SENSOR MUST BE INSTALLED WITHIN 300' OF CONTROL PANEL.

NOTE:

CUSTOMER SUPPLIED VARIABLE FREQUENCY DRIVES (VFD'S):

VFD SHALL BE PROGRAMMED BY OTHERS.

MINIMUM REQUIREMENTS FOR VFD'S FOR USAGE WITH M.A.R.V.E.L. SYSTEM:

- DRIVE MUST HAVE ONE DIGITAL INPUT WITH A LOW VOLTAGE START/STOP REFERENCE TO BE CONTROLLED BY THE USE OF A DRY CONTACT IN THE M.A.R.V.E.L. SYSTEM. THIS DIGITAL INPUT MUST BE PROGRAMMED FOR REMOTE 2-WIRE CONTROL.
- DRIVE MUST HAVE ONE ANALOG INPUT TO ACCEPT 0-10V DC SIGNAL TO BE USED AS A SPEED REFERENCE SIGNAL CONTROLLED BY THE M.A.R.V.E.L. SYSTEM. THIS ANALOG INPUT MUST BE PROGRAMMED TO ACCEPT 0-10V INPUT.
- DURING IDLE/COOKING MODE, THE M.A.R.V.E.L. SYSTEM WILL CONTINUE TO SEND A START/STOP SIGNAL TO THE VFD. IN CASE THE VFD EXPERIENCES A POWER LOSS DURING THIS TIME THE DRIVE MUST BE ABLE TO RESTART AUTOMATICALLY WHILE RECEIVING A START/STOP SIGNAL. THIS CAN BE ACHIEVED THROUGH A DRY CONTACT ON THE DRIVE TO MOMENTARILY BREAK THE START/STOP SIGNAL OR THROUGH PROGRAMMING, DEPENDING ON THE MAKE/MODEL OF THE DRIVE.

M.A.R.V.E.L. CONTROL PANEL

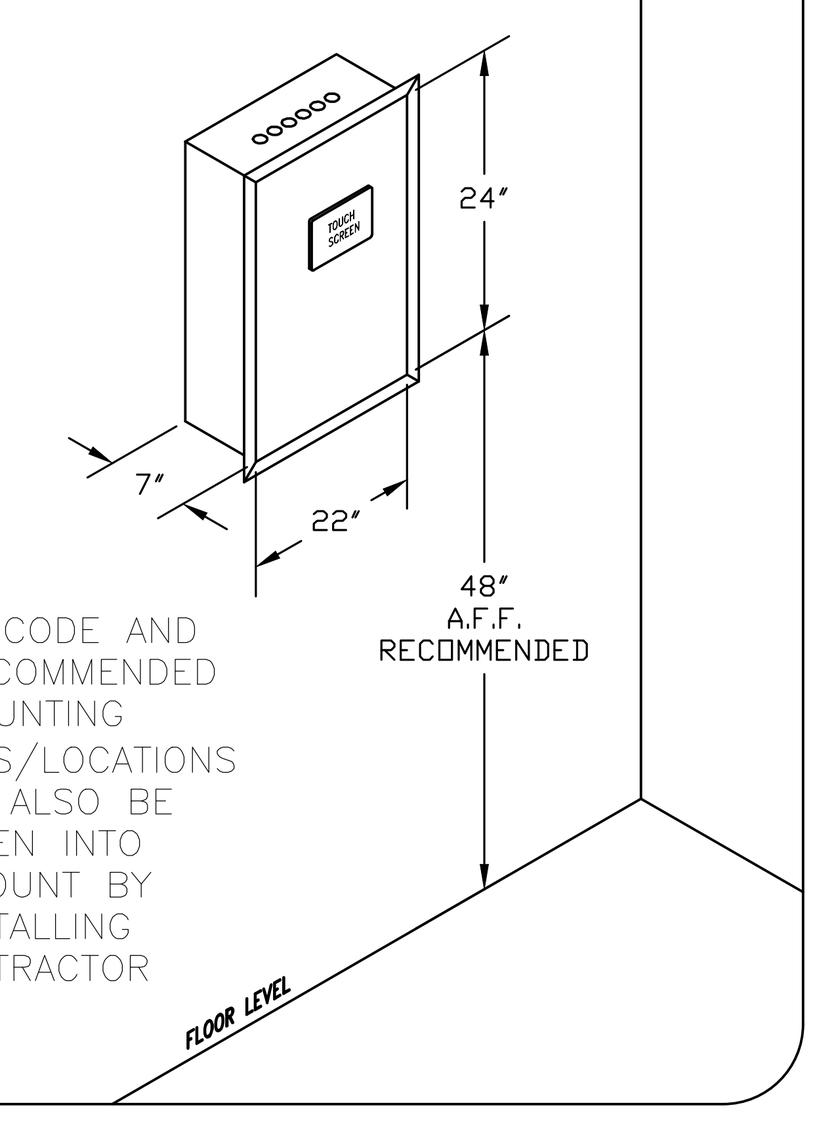

LOCAL CODE AND ADA RECOMMENDED MOUNTING POSITIONS/LOCATIONS MUST ALSO BE TAKEN INTO ACCOUNT BY INSTALLING CONTRACTOR

Halton M.A.R.V.E.L. TOUCH SCREEN

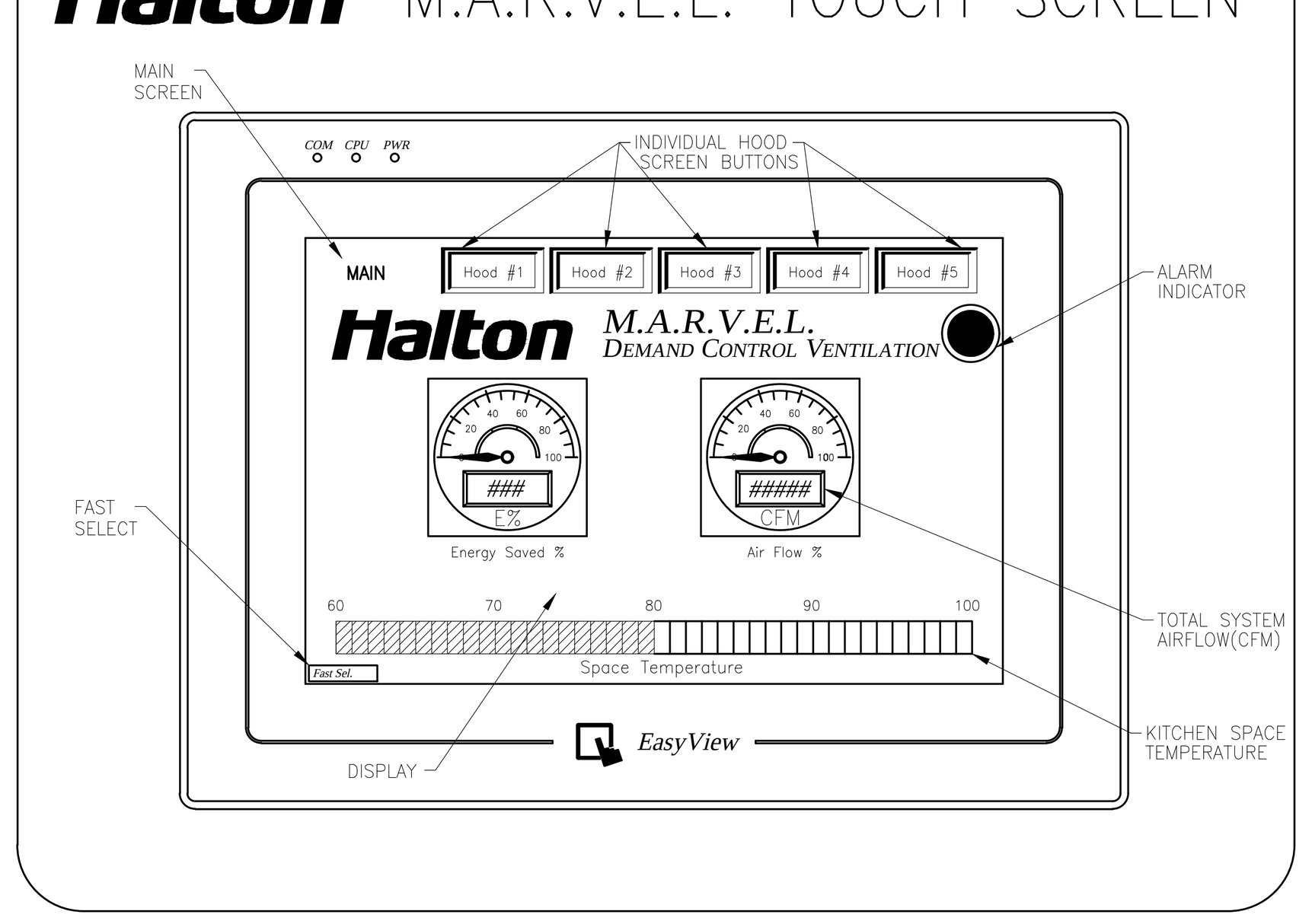

M.A.R.V.E.L. SYSTEM

M.A.R.V.E.L. EQUIPMENT CONNECTED LOADS

M.A.R.V.E.L. CONTROL PANEL= 10 AMPS EA.

M.A.R.V.E.L. PLC AT EACH HOOD SECTION= 4 AMPS EA.

ALL CIRCUITS ARE NOT TO EXCEED 15 AMP

NOTES:

- - - - - - - FIELD WIRING (BY E.C.) – 120V – 12AWG MIN.–10AWG MAX.

——— FIELD WIRING (BY E.C.) – 24V – 22AWG MIN.–16AWG MAX.

—-—-— SHIELDED NETWORK CABLES – PROVIDED BY HALTON FIELD INSTALLED BY OTHERS

SPACE TEMPERATURE SENSOR

2 CONDUCTOR/SHIELDED #18AWG 18/7 TO M.A.R.V.E.L. CONTROL PANEL BY ELECTRICAL CONTRACTOR

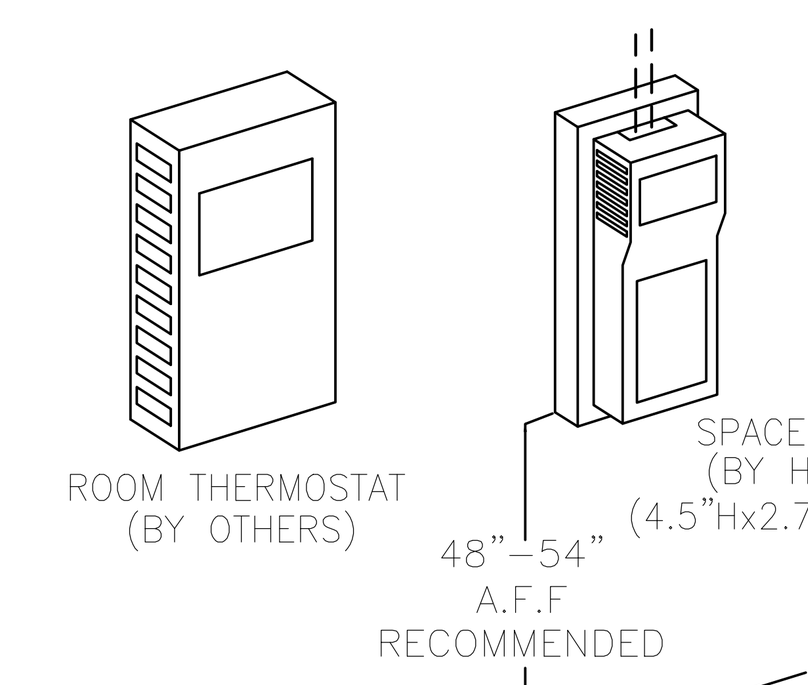

TEMPERATURE SENSOR TO BE MOUNTED AWAY FROM VARYING SOURCES OF HEAT. USUALLY IN CLOSE PROXIMITY TO THE ROOM THERMOSTAT. SENSOR TO BE LOCATED IN SAME "ZONE" AS HOODS THEY SERVE, BY NO CLOSER THAN 10'-12' FROM THE EXHAUST HOOD OR ANY OTHER UNHOODED APPLIANCES.

THIS DRAWING MUST BE CHECKED, SIGNED AND RETURNED TO THE APPROPRIATE FACTORY. PLEASE VERIFY THE FOLLOWING:
1. ALL DIMENSIONAL INFORMATION, MOUNTING POSITIONS AND CLEARANCES.
2. THE LOCATION AND TYPE OF COOKING EQUIPMENT.

NOTE TO APPROVER
ANY CHANGES IN COOKING EQUIPMENT SUCH AS INCREASED ENERGY INPUTS OR EQUIPMENT POSITION MAY AFFECT EXHAUST AIRFLOW. HALTON MUST BE NOTIFIED IF ANY OF THESE CHANGES OCCUR, A RECALCULATION EXHAUST AIRFLOW MAY BE REQUIRED.

☐ REVISE AND RESUBMIT

APPROVED FOR FABRICATION
☐ WITH NO CHANGES ☐ WITH CHANGES AS NOTED

APPROVED BY ________ DATE ________

COMPLIES WITH LATEST NFPA-96

MAIL APPROVED DRAWINGS TO APPROPRIATE FACTORY BELOW: WEBSITE: WWW.HALTONCOMPANY.COM

HALTON CO. (CANADA) ☐
1021 BREVIK PLACE
MISSISSAUGA, ON L4W 3R7
1-905-624-0301

HALTON CO. (USA) ☒
101 INDUSTRIAL DRIVE
SCOTTSVILLE, KY 42164
1-270-237-5600

REV.	REVISION DESCRIPTION	BY	DATE
1	ADDED THIS SHEET	BM	03.06.17
2	REVISED TO REMOTE CONTROL PANEL	CG	03.08.17
3	REVISED HOOD LAYOUT	AG	07.07.17
4	SPLIT MARVEL SYSTEMS UP	WU	07.12.17
5	REVISED HOOD ITEM NUMBERS	AG	07.17.17
6	REVISED MARVEL SYSTEMS TO ONE PANEL	WU	07.18.17
7	REVISED PROJECT TITLE	AG	10.05.17

PROJECT: WESTERN STATE HOSPITAL
LOCATION:
DRAWN BY: BM | DATE: 03.06.17
SCALE: NOT TO SCALE
CONSULTANT: HALLADIA ASSOC.

Halton

DRAWING TITLE: DEMAND CONTROL DETAILS

DRAWING No.: U17-165

REV. NO.: 7 | SHEET NO.: 5 of 6

REVISIONS

CONFORMED SET

HALLIDAY ASSOCIATES
656 NW NORWOOD
CAMAS, WASH. 98607
360 - 834 - 6657
FAX 360 - 834 - 5453
FOOD FACILITY CONSULTANTS
SPACE PLANNING ■ DESIGN

PROFESSIONAL MEMBER FOODSERVICE CONSULTANTS SOCIETY INTERNATIONAL
LAURA L. BOURLAND FCSI 700794

Western State Hospital
BUILDING 22, PATIENT SUPPORT CENTER
PATIENT SUPPORT CENTER
9601 STEILACOOM BLVD SW, LAKEWOOD, WASHINGTON 98498-7213

NAC ARCHITECTURE
nacarchitecture.com
2025 FIRST AVE | SUITE 300
SEATTLE WA 98121
P:206.441.4522

© 2016 NAC inc

DSHS NO	2016-410G(2-1)
NAC NO	121-16004
DRAWN	LB/SH
CHECKED	LB
DATE	03/16/2018

FIRST FLOOR FOOD SERVICE CANOPY HOOD DETAILS

FS3.05

1 FIRST FLOOR - FOOD SERVICE CANOPY HOOD DETAILS
Scale: NONE

9/19/2017 2:38:39 PM D:_Revit\WSH_Arch_cjacobs@nacarchitecture.com.rvt

ELECTRICAL & DATA CABLE CONNECTION SCHEDULE

CONNECTION #	CONNECTION DESCRIPTION	FROM	TO
E1–M	120V, 15AMP – CONTROL PANEL POWER – 3 WIRES	BUILDING SOURCE	CONTROL PANEL
E2–M	BROADBAND INTERNET CONNECTION	BUILDING SOURCE	CONTROL PANEL
E3–M	FIRE MODE SIGNAL – TO FIRE SUPPRESSION PANEL – 2 WIRES	CONTROL PANEL	FIRE SYSTEM
E4–M	3 WIRE STP CABLE – PLENUM RATED – TO BMS(BACNET)	CONTROL PANEL	BMS
E5–M	2 WIRE SHIELDED NETWORK CABLE – PROVIDED BY HALTON	CONTROL PANEL	HOOD #54A
E6–M	0–10V & START/STOP MUA SIGNAL TO BMS – 4 WIRES	CONTROL PANEL	BMS
E7–M	0–10V & START/STOP MUA SIGNAL TO BMS – 4 WIRES	CONTROL PANEL	BMS
E8–M	7 WIRE STP CABLE – PLENUM RATED FT6 – TO EF VFD	CONTROL PANEL	VFD
E9–M	7 WIRE STP CABLE – PLENUM RATED FT6 – TO EF VFD	CONTROL PANEL	VFD
E10–M	FIELD CONNECTION FOR MAIN DUCT GREASE SENSOR – 3 WIRES	CONTROL PANEL	GREASE SENSOR
E11–M	FIELD CONNECTION FOR MAIN DUCT GREASE SENSOR – 3 WIRES	CONTROL PANEL	GREASE SENSOR
E12–M	2 WIRES TO SPACE TEMPERATURE SENSOR	CONTROL PANEL	TEMP SENSOR
E13–M	2 WIRES TO SPACE TEMPERATURE SENSOR	CONTROL PANEL	TEMP SENSOR
E14–M	120V, 15AMP – M.A.R.V.E.L. CONTROLLER POWER – 3 WIRES	BUILDING SOURCE	HOOD #54A
E15–M	2 WIRE SHIELDED NETWORK CABLE – PROVIDED BY HALTON	HOOD #54A	HOOD #54B
E16–M	120V, 15AMP – M.A.R.V.E.L. CONTROLLER POWER – 3 WIRES	BUILDING SOURCE	HOOD #54B
E17–M	2 WIRE SHIELDED NETWORK CABLE – PROVIDED BY HALTON	HOOD #54B	HOOD #54C
E18–M	120V, 15AMP – M.A.R.V.E.L. CONTROLLER POWER – 3 WIRES	BUILDING SOURCE	HOOD #54C
E19–M	2 WIRE SHIELDED NETWORK CABLE – PROVIDED BY HALTON	HOOD #54C	HOOD #54D
E20–M	120V, 15AMP – M.A.R.V.E.L. CONTROLLER POWER – 3 WIRES	BUILDING SOURCE	HOOD #54D
E21–M	2 WIRE SHIELDED NETWORK CABLE – PROVIDED BY HALTON	HOOD #54D	HOOD #72A
E22–M	120V, 15AMP – M.A.R.V.E.L. CONTROLLER POWER – 3 WIRES	BUILDING SOURCE	HOOD #72A
E23–M	2 WIRE SHIELDED NETWORK CABLE – PROVIDED BY HALTON	HOOD #72A	HOOD #72B
E24–M	120V, 15AMP – M.A.R.V.E.L. CONTROLLER POWER – 3 WIRES	BUILDING SOURCE	HOOD #72B
E25–M	2 WIRE SHIELDED NETWORK CABLE – PROVIDED BY HALTON	HOOD #72B	HOOD #85A
E26–M	120V, 15AMP – M.A.R.V.E.L. CONTROLLER POWER – 3 WIRES	BUILDING SOURCE	HOOD #85A
E27–M	2 WIRE SHIELDED NETWORK CABLE – PROVIDED BY HALTON	HOOD #85A	HOOD #85B
E28–M	120V, 15AMP – M.A.R.V.E.L. CONTROLLER POWER – 3 WIRES	BUILDING SOURCE	HOOD #85B

1 FIRST FLOOR - FOOD SERVICE CANOPY HOOD DETAILS
Scale: NONE

THIS DRAWING MUST BE CHECKED, SIGNED AND RETURNED TO THE APPROPRIATE FACTORY. PLEASE VERIFY THE FOLLOWING:
1. ALL DIMENSIONAL INFORMATION, MOUNTING POSITIONS AND CLEARANCES.
2. THE CORRECT AND TYPE OF COOKING EQUIPMENT.

NOTE TO APPROVER
ANY CHANGES IN COOKING EQUIPMENT SUCH AS INCREASED ENERGY INPUTS OR EQUIPMENT POSITION MAY AFFECT EXHAUST AIRFLOW. HALTON MUST BE NOTIFIED IF ANY CHANGES OCCUR, A RECALCULATION EXHAUST AIRFLOW MAY BE REQUIRED.

☐ REVISE AND RESUBMIT

APPROVED FOR FABRICATION
☐ WITH NO CHANGES ☐ WITH CHANGES AS NOTED

APPROVED BY _____ DATE _____

MAIL APPROVED DRAWINGS TO APPROPRIATE FACTORY BELOW: | WEBSITE: WWW.HALTONCOMPANY.COM

HALTON CO. (USA)
101 INDUSTRIAL DRIVE
SCOTTSVILLE, KY 42164
1-270-237-5600 ☒

HALTON CO. (CANADA)
1021 BREVIK PLACE
MISSISSAUGA, ON L4W 3R7
1-905-624-0301 ☐

REV.	REVISION DESCRIPTION	BY	DATE
1			
2			
3			
4	SPLIT MARVEL SYSTEMS UP AND ADDED WALL	WU	07.12.17
5	REVISED HOOD DIMENSIONS	AG	07.17.17
6	REVISED WIRING DIAGRAM	WU	07.18.17
7	REVISED PROJECT TITLE	AG	10.05.17

PROJECT: WESTERN STATE HOSPITAL
LOCATION:
DRAWN BY: WU
DATE: 07.12.17
SCALE: NOT TO SCALE
CONSULTANT: HALLADIA ASSOC.

Halton

DRAWING TITLE: DEMAND CONTROL DETAILS

DRAWING No.: U17–165

REV. NO.: 7 SHEET NO.: 6 of 6

© 2018 NAC Inc.

REVISIONS

CONFORMED SET

HALLIDAY ASSOCIATES
636 NW NORWOOD CANAL, WASH. 98607
360 . 834 . 6857
FAX 360 . 834 . 5435
FOOD FACILITY CONSULTANTS
SPACE PLANNING + DESIGN

Western State Hospital
BUILDING 22, PATIENT SUPPORT CENTER
PATIENT SUPPORT CENTER
9601 STEILACOOM BLVD SW, LAKEWOOD, WASHINGTON 98498-7213

NAC ARCHITECTURE
nacarchitecture.com
2025 FIRST AVE | SUITE 300
SEATTLE WA 98121
P:206.441.4522

DSHS NO 2016-410G(2-1)
NAC NO 121-16004
DRAWN LB/SH
CHECKED LB
DATE 03/16/2018

FIRST FLOOR FOOD SERVICE CANOPY HOOD DETAILS

FS3.06

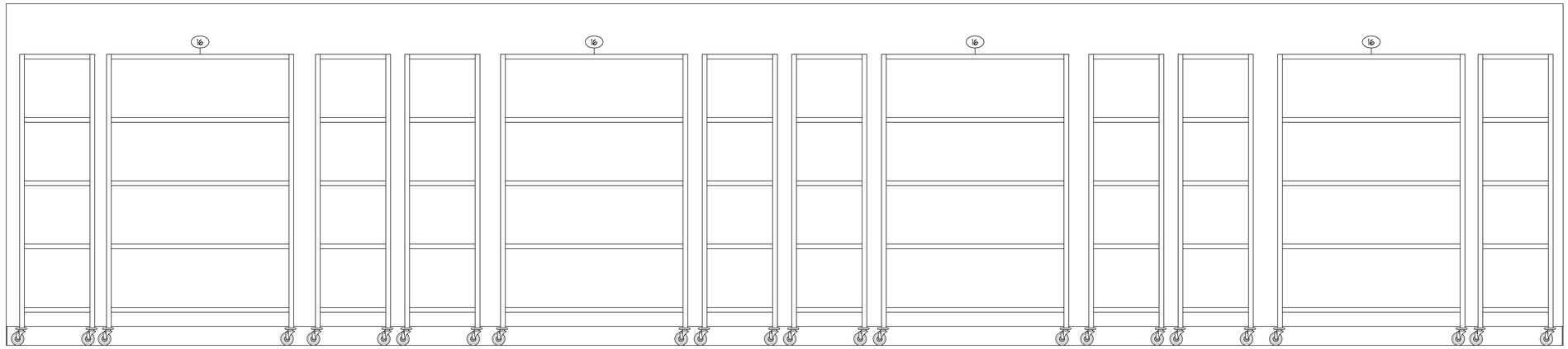

1 ELEVATION DRY STORAGE SHELVING
3/4"=1'-0"

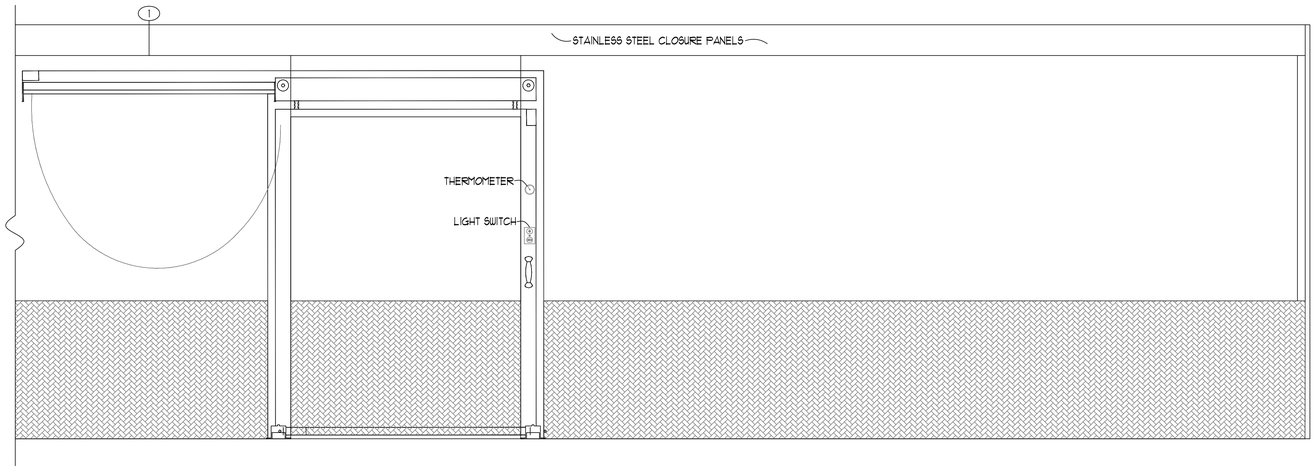

2 ELEVATION WALK-IN FREEZER W/ROLLING DOOR - (EXTERIOR)
3/4"=1'-0"

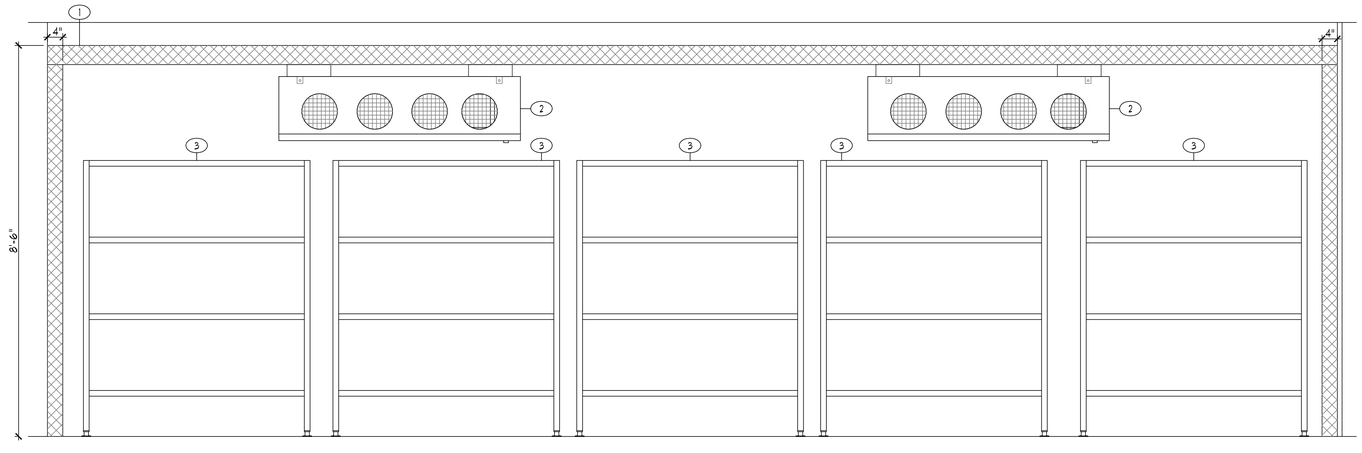

3 ELEVATION WALK-IN FREEZER BANK - (INTERIOR)
3/4"=1'-0"

1 FIRST FLOOR - FOOD SERVICE ELEVATION AND FABRICATION DETAILS
Scale: As noted

REVISIONS

CONFORMED SET

HALLIDAY ASSOCIATES
656 NW NORWOOD
CAMAS, WASH. 98607
360 - 834 - 6657
FAX 360 - 834 - 5455
FOOD FACILITY CONSULTANTS
SPACE PLANNING & DESIGN

Western State Hospital
BUILDING 22, PATIENT SUPPORT CENTER
PATIENT SUPPORT CENTER
9601 STEILACOOM BLVD SW, LAKEWOOD, WASHINGTON 98498-7213

NAC ARCHITECTURE
nacarchitecture.com
2025 FIRST AVE | SUITE 300
SEATTLE WA 98121
P:206.441.4522

© 2016 NAC INC

DSHS NO	2016-410G(2-1)
NAC NO	121-16004
DRAWN	LB/SH
CHECKED	LB
DATE	03/16/2018

FIRST FLOOR
FOOD SERVICE
ELEVATION/
FABRICATION
DETAILS

FS4.01

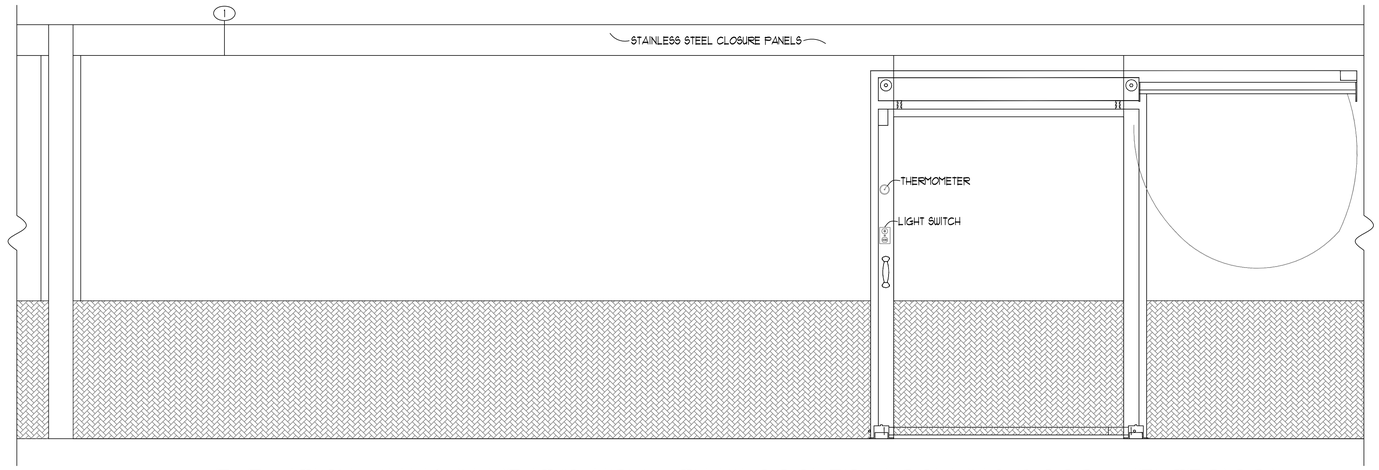

4 ELEVATION WALK-IN MEAT/DAIRY & THAW COOLER W/ROLLING DOOR - (EXTERIOR)
3/4"=1'-0"

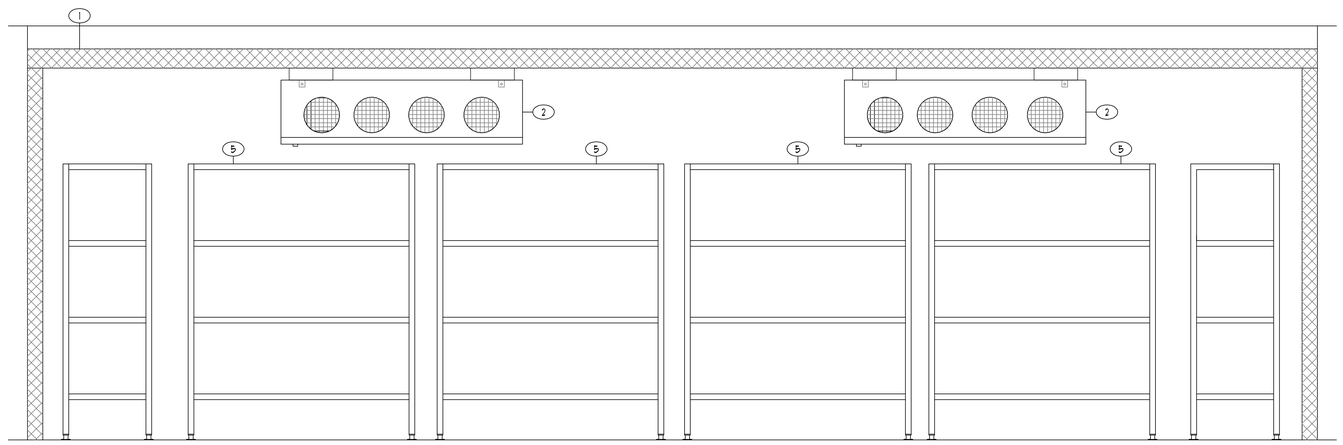

5 ELEVATION WALK-IN MEAT/DAIRY & THAW COOLER BANK- (INTERIOR)
3/4"=1'-0"

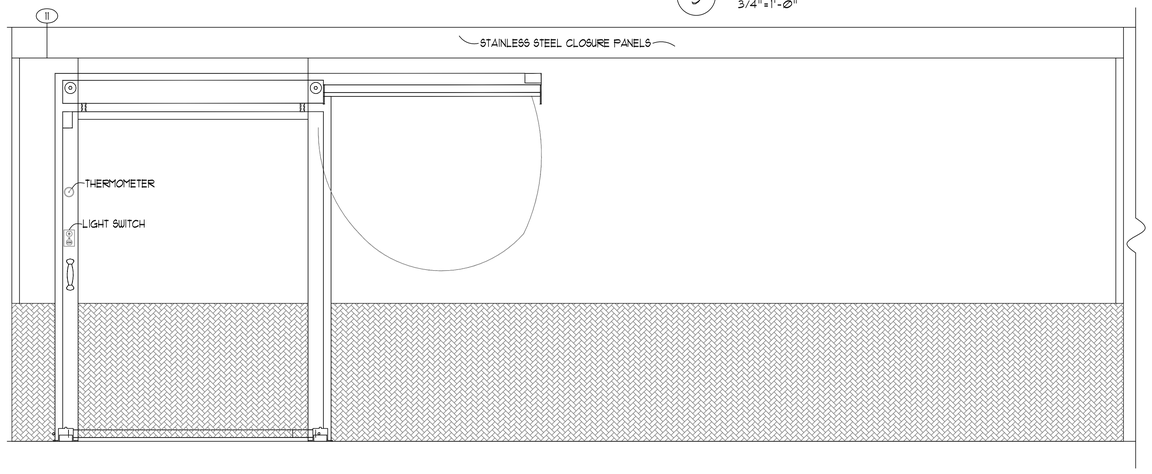

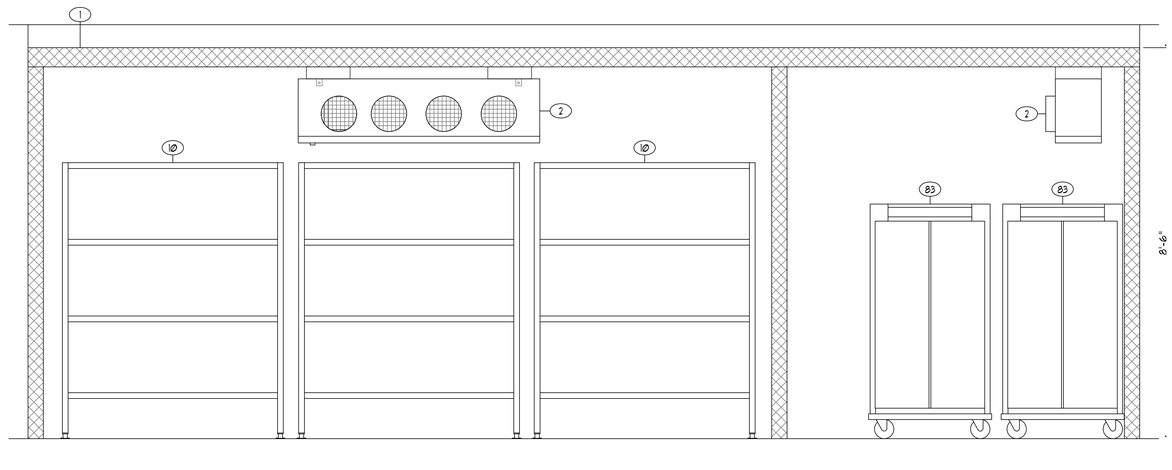

6 ELEVATION WALK-IN PRODUCE COOLER W/ROLLING DOOR - (EXTERIOR)
3/4"=1'-0"

7 ELEVATION WALK-IN PRODUCE & FINISHING COOLERS BANK- (INTERIOR)
3/4"=1'-0"

1 FIRST FLOOR - FOOD SERVICE ELEVATION AND FABRICATION DETAILS
Scale: As noted

9/19/2017 2:38:39 PM D:_Revit\WSH_Arch_cjacobs@nacarchitecture.com.rvt

REVISIONS

CONFORMED SET

HALLIDAY ASSOCIATES
656 NW NORWOOD
CAMAS, WASH. 98607
360 - 834 - 6657
FAX 360 - 834 - 9455
FOOD FACILITY CONSULTANTS
SPACE PLANNING & DESIGN

Western State Hospital
BUILDING 22, PATIENT SUPPORT CENTER
PATIENT SUPPORT CENTER
9601 STEILACOOM BLVD SW, LAKEWOOD, WASHINGTON 98498-7213

NAC ARCHITECTURE
nacarchitecture.com
2025 FIRST AVE | SUITE 300
SEATTLE WA 98121
P:206.441.4522

© 2016 NAC Inc

DSHS NO	2016-410G(2-1)
NAC NO	121-16004
DRAWN	LB/SH
CHECKED	LB
DATE	03/16/2018

FIRST FLOOR FOOD SERVICE ELEVATION/ FABRICATION DETAILS

FS4.02

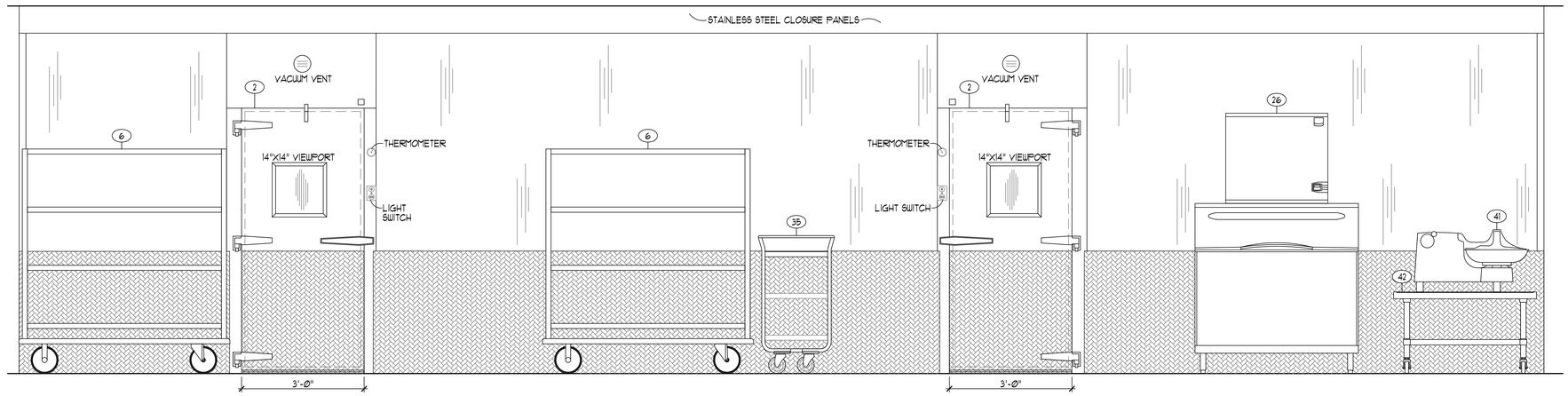

8 ELEVATION WALK-IN PRODUCE & FINISHING COOLER'S - (EXTERIOR)
3/4"=1'-0"

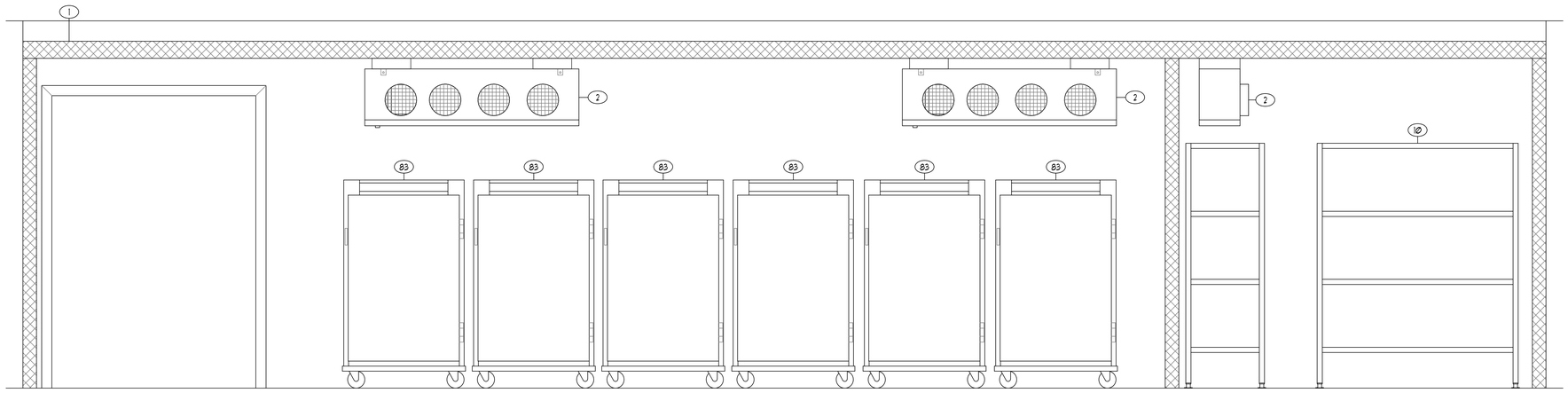

9 ELEVATION WALK-IN PRODUCE & FINISHING COOLER'S BANK- (INTERIOR)
3/4"=1'-0"

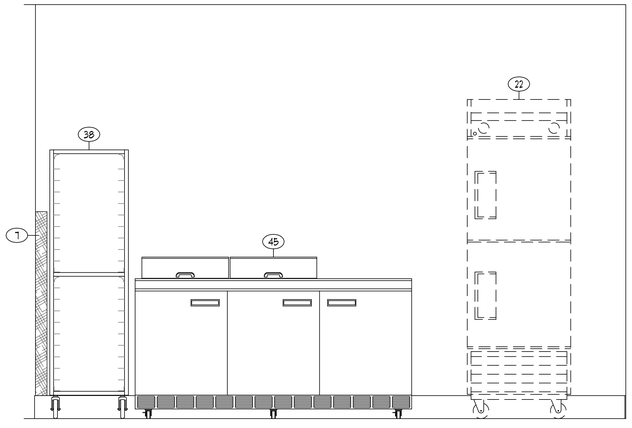

10 ELEVATION R.I. REFRIG./FREEZER & PREP TOP REFRIG.
3/4"=1'-0"

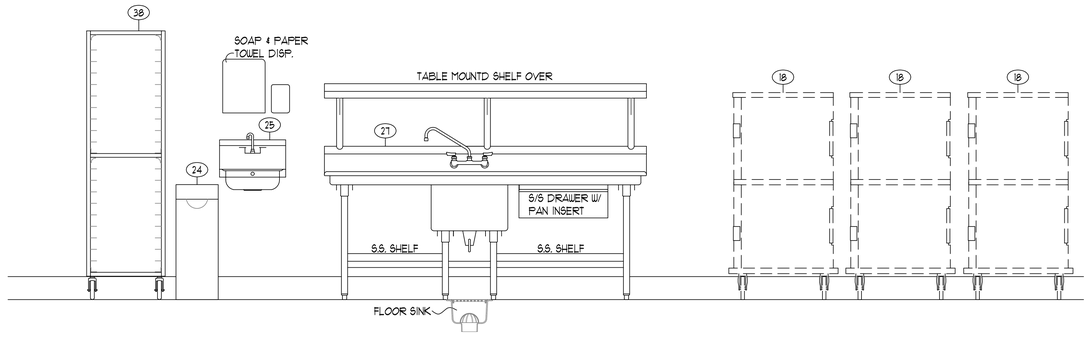

11 ELEVATION SNACK TRANSPORT CARTS & SUPPORT TABLE WITH SINK
3/4"=1'-0"

1 FIRST FLOOR - FOOD SERVICE ELEVATION AND FABRICATION DETAILS
Scale: As noted

REVISIONS

CONFORMED SET

HALLIDAY ASSOCIATES
656 NW NORWOOD
CAMAS, WASH. 98607
360 - 834 - 6657
FAX 360 - 834 - 5453
FOOD FACILITY CONSULTANTS
SPACE PLANNING • DESIGN

Western State Hospital
BUILDING 22, PATIENT SUPPORT CENTER
PATIENT SUPPORT CENTER
9601 STEILACOOM BLVD SW, LAKEWOOD, WASHINGTON 98498-7213

NAC ARCHITECTURE
nacarchitecture.com
2025 FIRST AVE | SUITE 300
SEATTLE WA 98121
P:206.441.4522

© 2016 NAC Inc

DSHS NO	2016-410G(2-1)
NAC NO	121-16004
DRAWN	LB/SH
CHECKED	LB
DATE	03/16/2018

FIRST FLOOR FOOD SERVICE ELEVATION/ FABRICATION DETAILS

FS4.03

9/19/2017 2:38:39 PM D:_RevitWSH_Arch_cjacobs@nacarchitecture.com.rvt

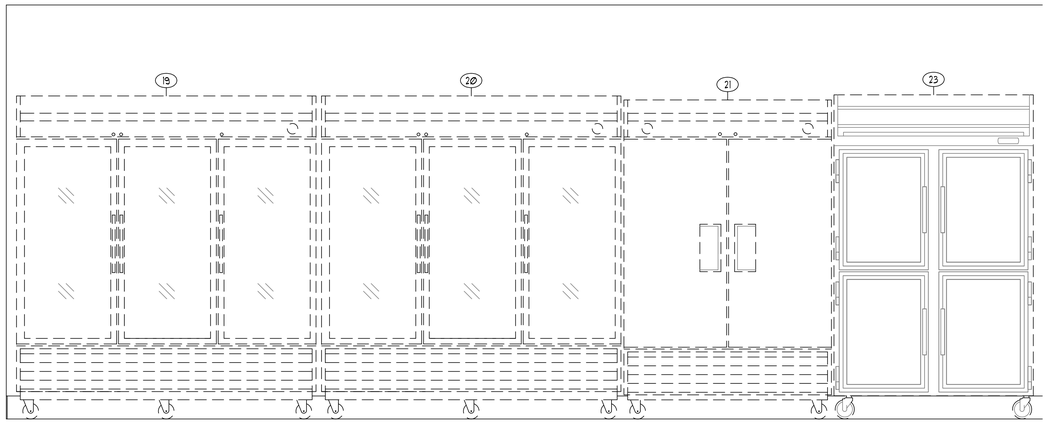

12 ELEVATION REACH-IN REFRIGERATOR'S & FREEZER'S
3/4"=1'-0"

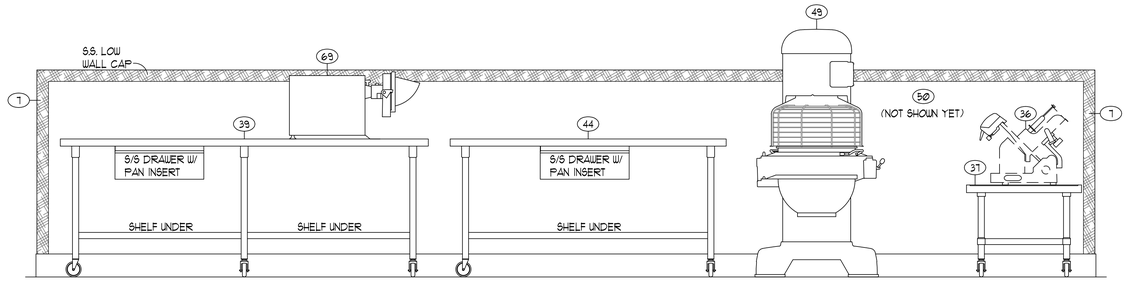

13 ELEVATION ISLAND WORK TABLES, 80-QT. MIXER, & SLICER
3/4"=1'-0"

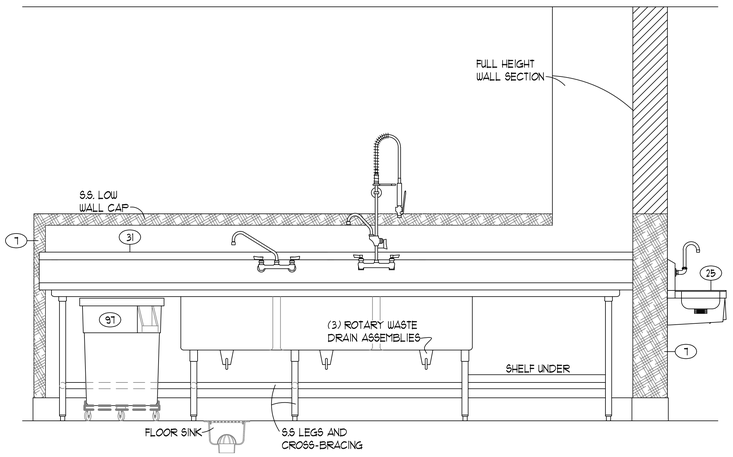

14 ELEVATION POT WASHING SINK TABLE
3/4"=1'-0"

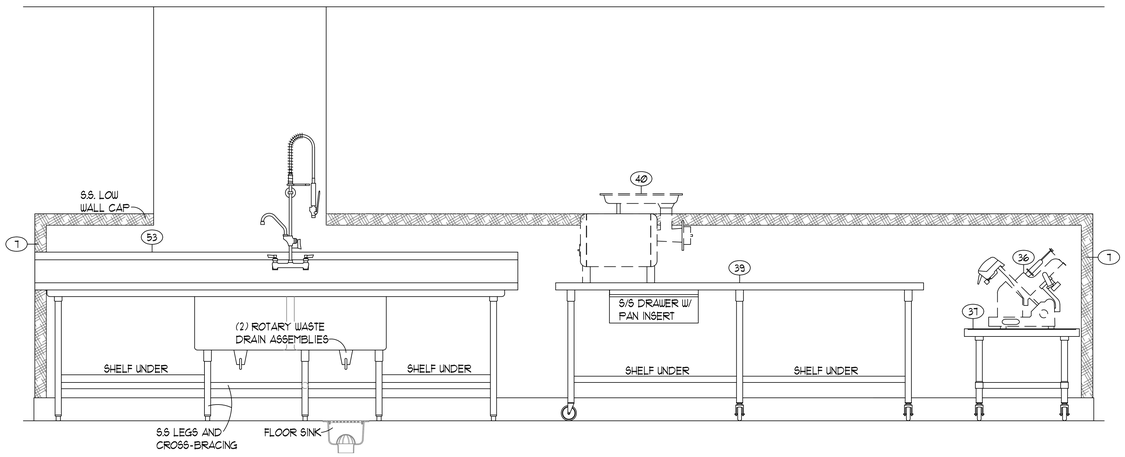

15 ELEVATION VEGETABLE PREP SINK TABLE & WORK TABLE
3/4"=1'-0"

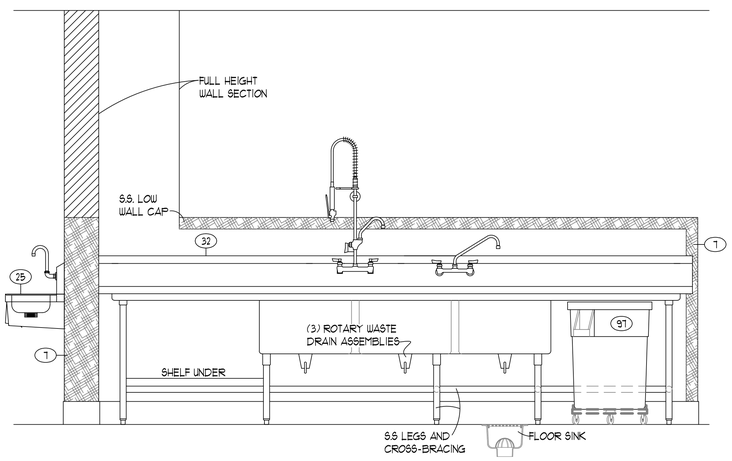

16 ELEVATION POT WASHING SINK TABLE
3/4"=1'-0"

1 FIRST FLOOR - FOOD SERVICE ELEVATION AND FABRICATION DETAILS
Scale: As noted

9/19/2017 2:38:39 PM D:_RevitWSH_Arch_cjacobs@nacarchitecture.com.rvt

REVISIONS

CONFORMED SET

HALLIDAY ASSOCIATES
656 NW NORWOOD
CAMAS, WASH. 98607
360 - 834 - 6857
FAX 360 - 834 - 5435
FOOD FACILITY CONSULTANTS
SPACE PLANNING & DESIGN

Western State Hospital
BUILDING 22, PATIENT SUPPORT CENTER
PATIENT SUPPORT CENTER
9601 STEILACOOM BLVD SW, LAKEWOOD, WASHINGTON 98498-7213

NAC ARCHITECTURE
nacarchitecture.com
2025 FIRST AVE | SUITE 300
SEATTLE WA 98121
P:206.441.4522

© 2016 NAC INC

DSHS NO	2016-410G(2-1)
NAC NO	121-16004
DRAWN	LB/SH
CHECKED	LB
DATE	03/16/2018

FIRST FLOOR FOOD SERVICE ELEVATION/ FABRICATION DETAILS

FS4.04

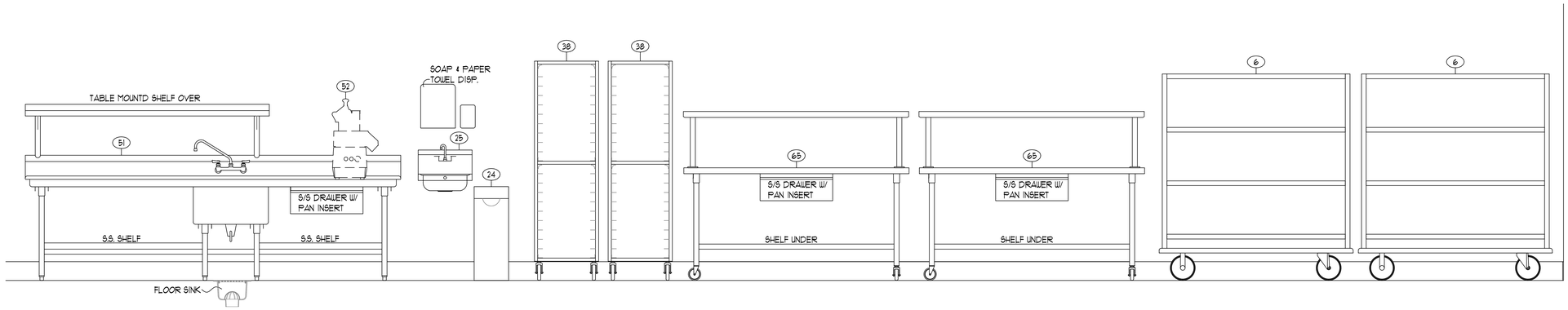

17 ELEVATION SUPPORT TABLE WITH SINK, WORK YABLE, RACKS, & QUEEN MARY'S
3/4"=1'-0"

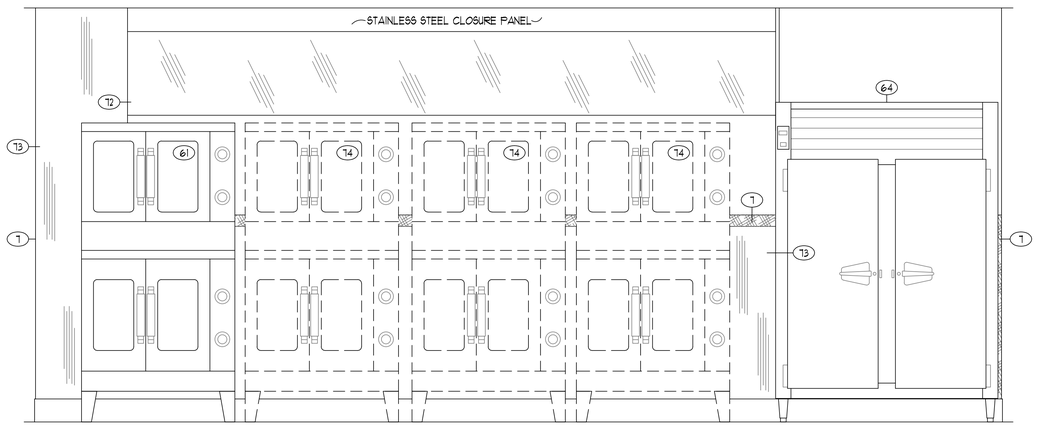

18 ELEVATION COOKING LINE (CONVECTION OVEN'S)
3/4"=1'-0"



19 ELEVATION COOKING LINE (ROLL-IN COMBI-OVEN STEAMERS)
3/4"=1'-0"

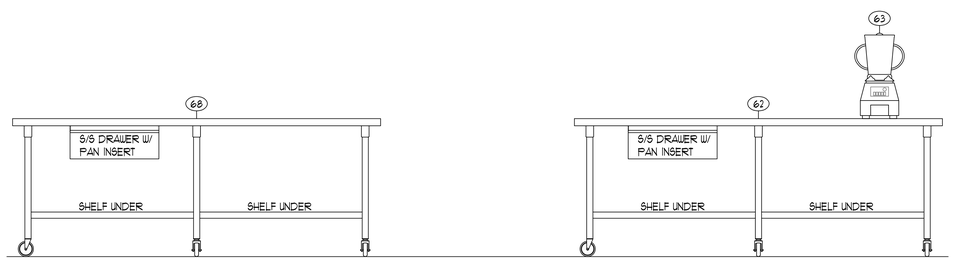

20 ELEVATION ISLAND WORK TABLES
3/4"=1'-0"

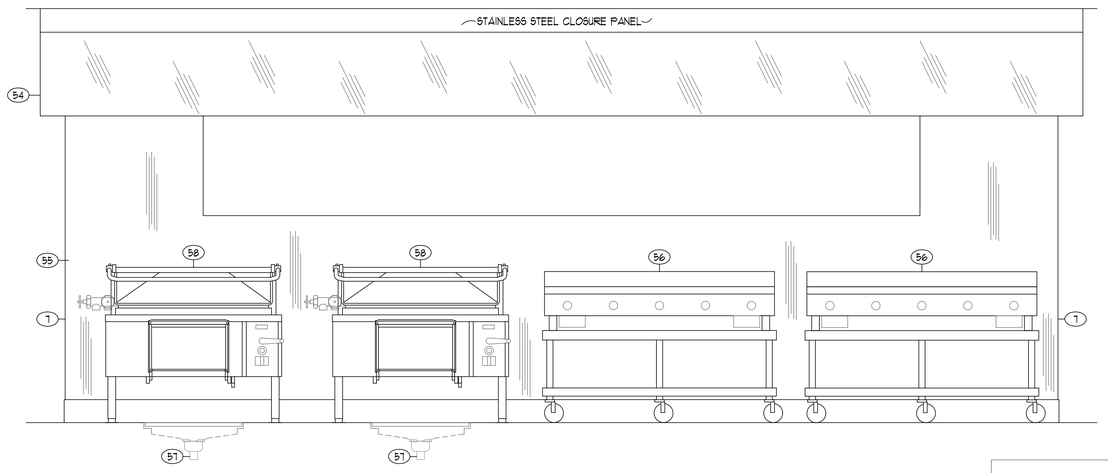

21 ELEVATION COOKING LINE (TILTING SKILLETS & GRIDDLES)
3/4"=1'-0"

1 FIRST FLOOR - FOOD SERVICE ELEVATION AND FABRICATION DETAILS
Scale: As noted

9/19/2017 2:38:39 PM D:_Revit\WSH_Arch_cjacobs@nacarchitecture.com.rvt

REVISIONS

CONFORMED SET

HALLIDAY ASSOCIATES
656 NW NORWOOD
CAMAS, WASH. 98607
360 - 834 - 6857
FAX 360 - 834 - 5453
FOOD FACILITY CONSULTANTS
SPACE PLANNING & DESIGN

Western State Hospital
BUILDING 22, PATIENT SUPPORT CENTER
PATIENT SUPPORT CENTER
9601 STEILACOOM BLVD.SW, LAKEWOOD, WASHINGTON 98498-7213

NAC ARCHITECTURE
nacarchitecture.com
2025 FIRST AVE | SUITE 300
SEATTLE WA 98121
P:206.441.4522

© 2016 NAC Inc

DSHS NO	2016-410G(2-1)
NAC NO	121-16004
DRAWN	LB/SH
CHECKED	LB
DATE	03/16/2018

FIRST FLOOR FOOD SERVICE ELEVATION/ FABRICATION DETAILS

FS4.05

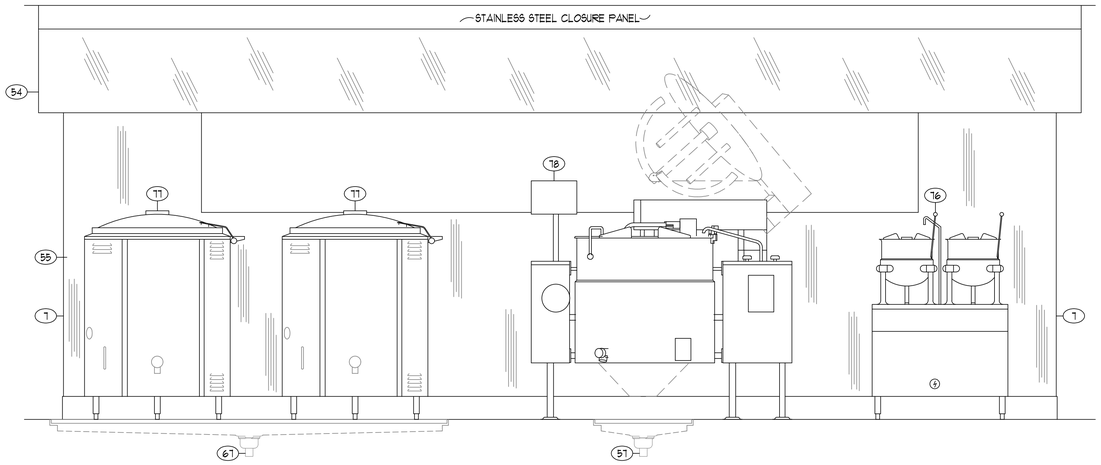

22 ELEVATION COOKING LINE (VARIES KETTLES)
3/4"=1'-0"

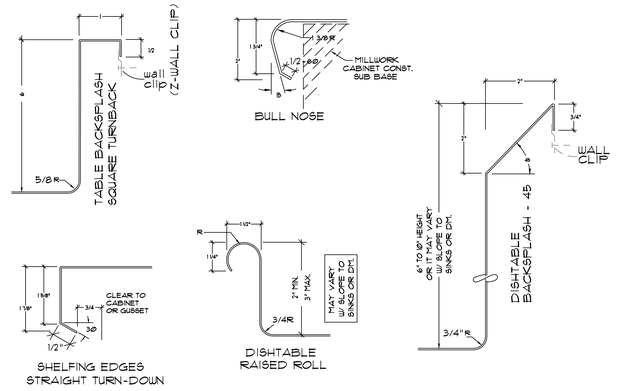

TABLE EDGES / BACKSPLASH / SECTION EDGE DETAILS

A DETAILS TABLE EDGES / BACKSPLASH / SECTION EDGE
3/4"=1'-0"

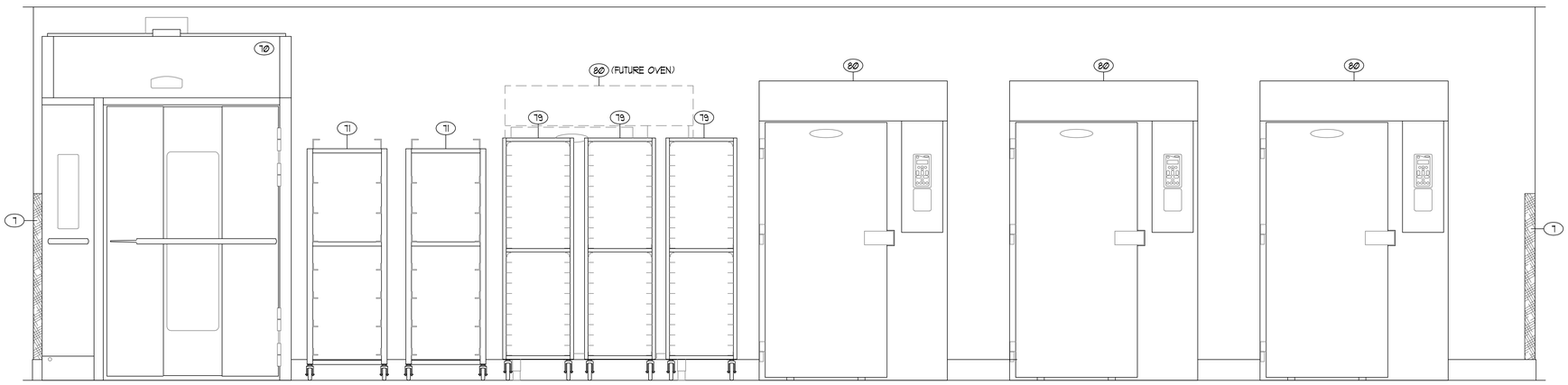

23 ELEVATION COOKING LINE (ROLL-IN RACK OVEN & ROLL-IN BLAST CHILLERS)
3/4"=1'-0"

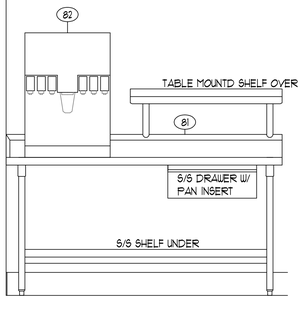

24 ELEVATION BEVERAGE TABLE
3/4"=1'-0"

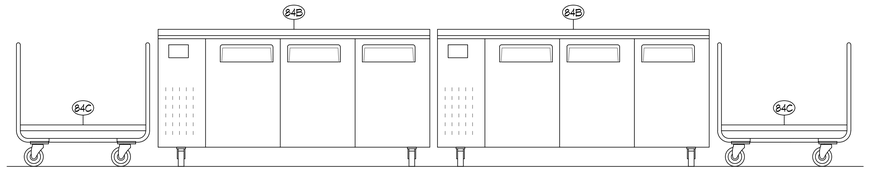

25 ELEVATION TRAY ASSEMBLY LINE
3/4"=1'-0"

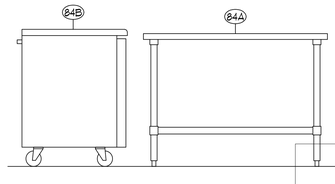

26 ELEVATION TRAY ASSEMBLY LINE
3/4"=1'-0"

1 FIRST FLOOR - FOOD SERVICE ELEVATION AND FABRICATION DETAILS
Scale: As noted

9/19/2017 2:38:39 PM D:_Revit\WSH_Arch_cjacobs@nacarchitecture.com.rvt

REVISIONS

CONFORMED SET

HALLIDAY ASSOCIATES
656 NW NORWOOD
CAMAS, WASH. 98607
360 - 834 - 6857
FAX 360 - 834 - 9453
FOOD FACILITY CONSULTANTS
SPACE PLANNING + DESIGN

Western State Hospital
BUILDING 22, PATIENT SUPPORT CENTER
PATIENT SUPPORT CENTER
9601 STEILACOOM BLVD SW, LAKEWOOD, WASHINGTON 98498-7213

NAC ARCHITECTURE
nacarchitecture.com
2025 FIRST AVE | SUITE 300
SEATTLE WA 98121
P:206.441.4522

DSHS NO	2016-410G(2-1)
NAC NO	121-16004
DRAWN	LB/SH
CHECKED	LB
DATE	03/16/2018

FIRST FLOOR FOOD SERVICE ELEVATION/ FABRICATION DETAILS

© 2016 NAC INC

FS4.06

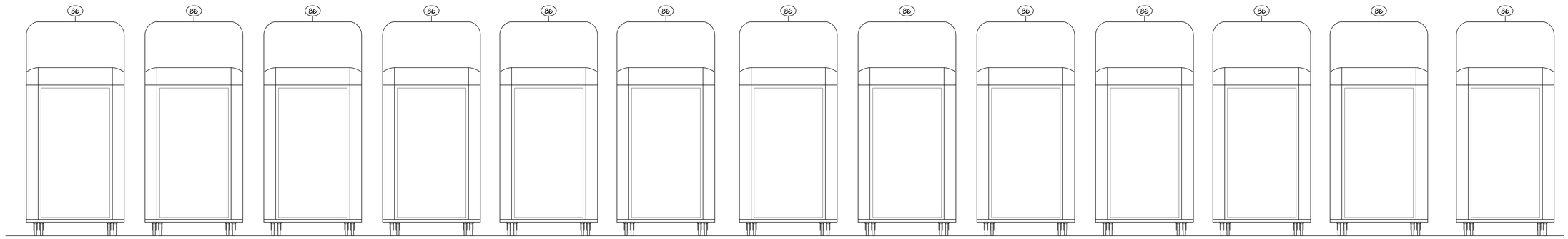

28 ELEVATION DOCKING STATIONS
3/4"=1'-0"

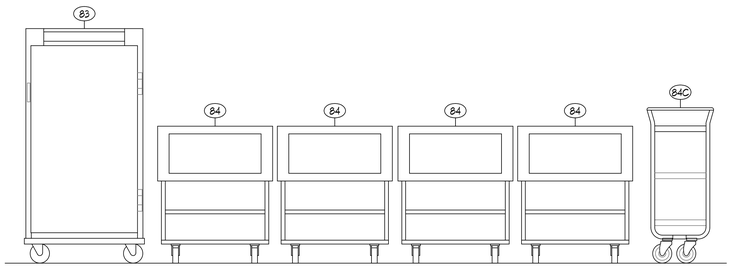

27 ELEVATION TRAY ASSEMBLY LINE
3/4"=1'-0"

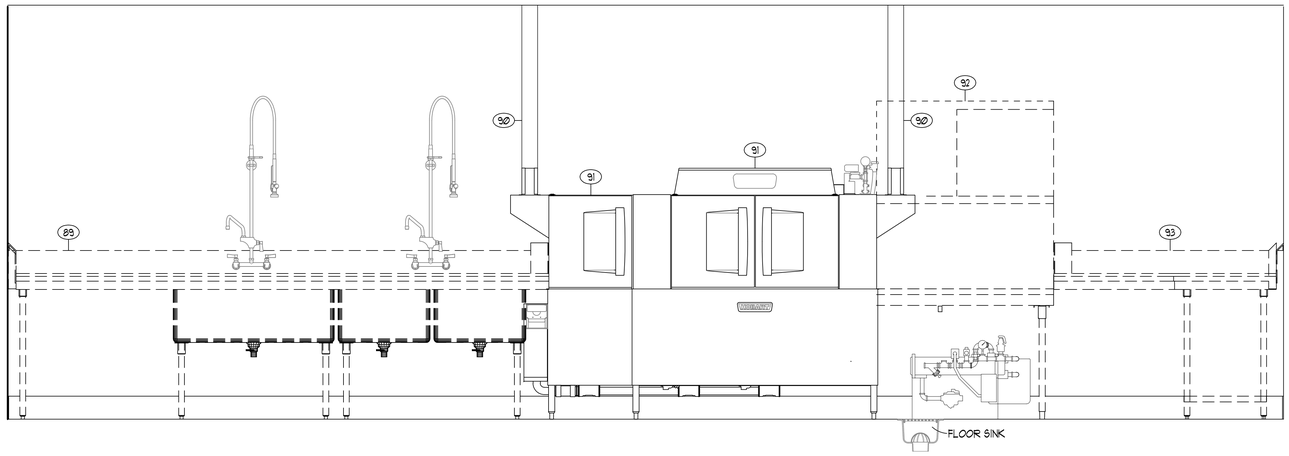

29 ELEVATION EXISTING POTWASHING WITH NEW POTWASHER
3/4"=1'-0"

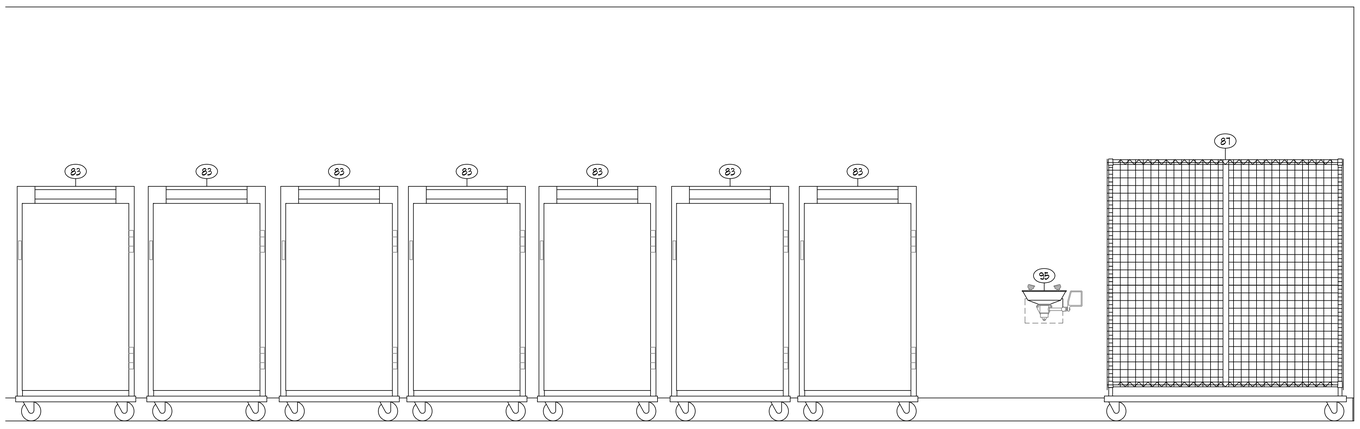

30 ELEVATION MEAL TRANSPORT CARTS, EYE WASH STATION, AND SECURED STORAGE
3/4"=1'-0"

1 FIRST FLOOR - FOOD SERVICE ELEVATION AND FABRICATION DETAILS
Scale: As noted

9/19/2017 2:38:39 PM D:_Revit\WSH_Arch_cjacobs@nacarchitecture.com.rvt

REVISIONS

CONFORMED SET

HALLIDAY ASSOCIATES
656 NW NORWOOD
CAMAS, WASH. 98607
360 - 834 - 6657
FAX 360 - 834 - 5455
FOOD FACILITY CONSULTANTS
SPACE PLANNING + DESIGN

Western State Hospital
BUILDING 22, PATIENT SUPPORT CENTER
PATIENT SUPPORT CENTER
9601 STEILACOOM BLVD SW, LAKEWOOD, WASHINGTON 98498-7213

NAC ARCHITECTURE
nacarchitecture.com
2025 FIRST AVE | SUITE 300
SEATTLE WA 98121
P:206.441.4522

© 2016 NAC INC

DSHS NO	2016-410G(2-1)
NAC NO	121-16004
DRAWN	LB/SH
CHECKED	LB
DATE	03/16/2018

FIRST FLOOR FOOD SERVICE ELEVATION/ FABRICATION DETAILS

FS4.07

GENERAL NOTES

THESE GENERAL NOTES ARE TO BE USED AS A SUPPLEMENT TO THE SPECIFICATIONS. ANY DISCREPANCIES FOUND AMONG THE DRAWINGS, THE SPECIFICATIONS, THESE GENERAL NOTES AND THE SITE CONDITIONS SHALL BE REPORTED TO THE ARCHITECT, WHO SHALL CORRECT SUCH DISCREPANCY IN WRITING. ANY WORK DONE BY THE GENERAL CONTRACTOR AFTER DISCOVERY OF SUCH DISCREPANCY SHALL BE DONE AT THE GENERAL CONTRACTOR'S RISK. THE GENERAL CONTRACTOR SHALL VERIFY AND COORDINATE DIMENSIONS AMONG ALL DRAWINGS PRIOR TO PROCEEDING WITH ANY WORK OR FABRICATION. THE STRUCTURE HAS BEEN DESIGNED TO RESIST CODE SPECIFIED VERTICAL AND LATERAL FORCES AFTER THE CONSTRUCTION OF ALL STRUCTURAL ELEMENTS HAS BEEN COMPLETED. STABILITY OF THE STRUCTURE PRIOR TO COMPLETION IS THE SOLE RESPONSIBILITY OF THE GENERAL CONTRACTOR. THIS RESPONSIBILITY INCLUDES BUT IS NOT LIMITED TO JOB SITE SAFETY; ERECTION MEANS, METHODS, AND SEQUENCES; TEMPORARY SHORING, FORMWORK, BRACING; USE OF EQUIPMENT AND CONSTRUCTION PROCEDURES. PROVIDE ADEQUATE RESISTANCE TO LOADS ON THE STRUCTURES DURING CONSTRUCTION PER SEI/ASCE STANDARD NO. 37-14 "DESIGN LOADS ON STRUCTURES DURING CONSTRUCTION."

CONSTRUCTION OBSERVATION BY THE STRUCTURAL ENGINEER IS FOR GENERAL CONFORMANCE WITH DESIGN ASPECTS ONLY AND IS NOT INTENDED IN ANY WAY TO REVIEW THE CONTRACTOR'S CONSTRUCTION PROCEDURES.

STANDARDS
ALL METHODS, MATERIALS AND WORKMANSHIP SHALL CONFORM TO THE 2015 INTERNATIONAL BUILDING CODE (IBC) AS AMENDED AND ADOPTED BY THE LOCAL BUILDING OFFICIAL OR APPLICABLE JURISDICTION.

CONTRACT DRAWINGS / DIMENSIONS

ARCHITECTURAL DRAWINGS ARE THE PRIME CONTRACT DRAWINGS. CONSULTANT DRAWINGS BY OTHER DISCIPLINES ARE SUPPLEMENTARY TO ARCHITECTURAL DRAWINGS. REPORT DIMENSIONAL OMISSIONS OR DISCREPANCIES BETWEEN ARCHITECTURAL DRAWINGS AND STRUCTURAL, MECHANICAL, ELECTRICAL OR CIVIL DRAWINGS TO ARCHITECT PRIOR TO PROCEEDING WITH WORK.

STRUCTURAL DRAWINGS SHALL BE USED IN CONJUNCTION WITH ARCHITECTURAL DRAWINGS. PRIMARY STRUCTURAL ELEMENTS ARE DIMENSIONED ON STRUCTURAL PLANS AND DETAILS AND OVERALL LAYOUT OF STRUCTURAL PORTION OF WORK. SOME SECONDARY ELEMENTS ARE NOT DIMENSIONED SUCH AS, WALL CONFIGURATIONS. INCLUDING EXACT DOOR AND WINDOW LOCATIONS, ALCOVES, SLAB SLOPES AND DEPRESSIONS, CURBS, ETC. VERTICAL DIMENSIONAL CONTROL IS DEFINED BY ARCHITECTURAL WALL SECTIONS AND BUILDING SECTIONS. STRUCTURAL DETAILS SHOW DIMENSIONAL RELATIONSHIPS TO CONTROL DIMENSIONS DEFINED BY ARCHITECTURAL DRAWINGS. DETAILING AND SHOP DRAWING PRODUCTION FOR STRUCTURAL ELEMENTS WILL REQUIRE DIMENSIONAL INFORMATION CONTAINED IN **BOTH** ARCHITECTURAL AND STRUCTURAL DRAWINGS.

DESIGN CRITERIA

VERTICAL LOADS

AREA	DESIGN DEAD LOAD	LIVE LOAD (2)	PARTITION LOAD	CONCENTRATED LOADS
ROOF	20 PSF	25 PSF (1)		
MECHANICAL ROOM	75 PSF	40 PSF	+EQUIPMENT	
OFFICE	75 PSF	50 PSF	+20 PSF	2,000#
CORRIDORS (ABOVE 1ST FLR)	75 PSF	80 PSF		2,000#
CORRIDORS (1ST FLR)	ACTUAL	100 PSF		2,000#
STAIRS	ACTUAL	100 PSF		300#
LIGHT STORAGE	75 PSF	125 PSF (3)		
HEAVY STORAGE	75 PSF	250 PSF (3)		

(1) DRIFT AND UNBALANCED SNOW LOAD PER ASCE 7-10, CHAPTER 7.
(2) LIVE LOADS EXCEPT SNOW LOADS ARE REDUCED PER IBC SECTION 1607.10.
(3) LIVE LOAD REDUCTION NOT PERMITTED EXCEPT AS NOTED IN IBC SECTION 1607.10.

SNOW: (MINIMUM ROOF SNOW LOAD = 25 PSF)

Pg = 20 PSF = GROUND SNOW
Pf = 0.7CeCtIsPg = FLAT ROOF SNOW LOAD
Ps = CsPf = SLOPED ROOF SNOW LOAD
Is = 1.0 Ce = 1.0, Ct = 1.0, Cs = VARIES

LATERAL FORCES

LATERAL FORCES ARE TRANSMITTED BY DIAPHRAGM ACTION OF ROOF AND FLOORS TO BRACED FRAME/SHEAR WALLS. LOADS ARE THEN TRANSFERRED TO FOUNDATION BY BRACED FRAME/SHEAR WALL ACTION WHERE ULTIMATE DISPLACEMENT IS RESISTED BY PASSIVE PRESSURE OF EARTH AND/OR SLIDING FRICTION. OVERTURNING IS RESISTED BY DEAD LOAD OF THE STRUCTURE.

WIND:

THE BUILDING MEETS THE CRITERIA TO USE THE "METHOD 2 - SIMPLIFIED ENVELOPE PROCEDURE" PER ASCE 7-10.

- EXPOSURE CATEGORY = B
- BASIC WIND SPEED, (3 SEC. GUST), V_{ULT} = 110 MPH; V_{ASD} = 85 MPH
- RISK CATEGORY PER TABLE 1.5-1 = II
- TOPOGRAPHIC FACTOR K_{ZT} = 1.0
- INTERNAL PRESSURE COEFFICIENT (ENCLOSED) = ± 0.18
- COMPONENTS AND CLADDING LOADS, SEE THE FOLLOWING TABLES:

ROOF SURFACES [1]						
EFFECTIVE WIND AREA	POSITIVE PRESSURES (PSF)			NEGATIVE PRESSURES (PSF)		
	ZONE [2]					
	1	2	3	1	2	3
10 SF	16.0	16.0	16.0	-21.8	-36.5	-55.0
20 SF	16.0	16.0	16.0	-21.2	-32.6	-45.5
50 SF	16.0	16.0	16.0	-20.5	-27.5	-33.1
100 SF	16.0	16.0	16.0	-19.9	-23.6	-23.6

WALL SURFACES AND ROOF OVERHANGS [1]						
EFFECTIVE WIND AREA	POSITIVE PRESSURE (PSF)		NEGATIVE PRESSURE (PSF)		ROOF OVERHANGS (PSF)	
	ZONE [2]					
	4	5	4	5	2	3
10 SF	21.8	21.8	-23.6	-29.1	-31.4	-51.6
20 SF	20.8	20.8	-22.6	-27.2	-30.8	-40.5
50 SF	19.5	19.5	-21.3	-24.6	-30.1	-25.9
100 SF	18.5	18.5	-20.4	-22.6	-29.5	-16.0
500 SF	16.2	16.2	-18.1	-18.1	NA	NA

1. VALUES SHOWN IN TABLE ARE GROSS ULTIMATE WIND PRESSURES.
2. ZONES ARE AS DEFINED BY FIGURE 30.5-1 IN ASCE 7-10.

SEISMIC: (ASCE 7-10) V = CsW

WHERE $Cs = \frac{S_{DS}}{\left(\frac{R}{Ie}\right)}$; WITH

Cs MINIMUM = $0.044\, S_{DS} Ie \geq 0.01$
OR
Cs MINIMUM = $\frac{0.5S_1}{\frac{R}{Ie}}$ FOR $S_1 > 0.6g$

Cs MAXIMUM = $\frac{S_{D1}}{T(\frac{R}{Ie})}$ FOR $T \leq T_L$
OR
Cs MAXIMUM = $\frac{S_{D1}T_L}{T^2(\frac{R}{Ie})}$ FOR $T > T_L$

SEISMIC IMPORTANCE FACTOR, Ie = 1.0
RISK CATEGORY OF BUILDING PER TABLE 1.5-1 = II
SPECTRAL RESPONSE ACCELERATIONS S_S = 1.304 & S_1 = .515
SITE CLASS PER TABLE 20.3-1 = C
DESIGN SPECTRAL RESPONSE ACCELERATIONS S_{DS} = .870 & S_{D1} = .447
SEISMIC DESIGN CATEGORY = D
W = EFFECTIVE SEISMIC WEIGHT OF BUILDING = 1833k
ANALYSIS PROCEDURE USED = EQUIVALENT LATERAL FORCE PROCEDURE
RESPONSE MODIFICATION FACTOR PER TABLE 12.2-1, R = 6
Cs = 0.145 USD
DESIGN BASE SHEAR V = 226k

PIPES, DUCTS AND MECHANICAL EQUIPMENT SUPPORTED OR BRACED FROM STRUCTURE. CONFORM TO SHEET METAL AND AIR CONDITIONING CONTRACTORS' NATIONAL ASSOCIATION, INC. PUBLICATION "SEISMIC RESTRAINT MANUAL: GUIDELINES FOR MECHANICAL SYSTEMS". SPRINKLER LINE ATTACHMENTS SHALL CONFORM TO NFPA PAMPHLET 13.

FOUNDATION DESIGN CRITERIA (REFER TO GEOTECHNICAL REPORT BY ASSOCIATED EARTH SCIENCES, INC DATED SEPTEMBER 27, 2017.

SOIL BEARING PRESSURE: 3500 PSF

ACTIVE PRESSURE - RESTRAINED: 50 PCF +10H SEISMIC SURCHARGE
ACTIVE PRESSURE - UNRESTRAINED: 35 PCF +5H SEISMIC SURCHARGE
PASSIVE RESISTANCE: 250 PCF (INCLUDES F.O.S. ≥ 1.5)
COEFFICIENT OF FRICTION: .30 (INCLUDES F.O.S. ≥ 1.5)
*1/3 INCREASE ALLOWED FOR SEISMIC OR WIND LOADING

ALL FOOTINGS SHALL BEAR ON FIRM, UNDISTURBED EARTH OR "STRUCTURAL BACKFILL". NATIVE EARTH BEARING SHALL BE SURFACE COMPACTED. AREAS OVER-EXCAVATED SHALL BE BACKFILLED WITH LEAN CONCRETE (F'c= 2000 PSI) OR "STRUCTURAL BACKFILL". AREAS DESIGNATED "STRUCTURAL BACKFILL" SHALL BE FILLED WITH APPROVED WELL-GRADED BANKRUN MATERIAL. MAXIMUM SIZE OF ROCK 4". FROZEN SOIL, ORGANIC MATERIAL AND DELETERIOUS MATTER NOT ALLOWED. COMPACT TO AT LEAST 95% OF ITS MAXIMUM DENSITY AS DETERMINED BY ASTM D1557. CONTRACTOR SHALL EXERCISE EXTREME CARE DURING EXCAVATION TO AVOID DAMAGE TO BURIED LINES, TANKS, AND OTHER CONCEALED ITEMS. UPON DISCOVERY, DO NOT PROCEED WITH WORK UNTIL RECEIVING WRITTEN INSTRUCTIONS FROM ARCHITECT. A COMPETENT REPRESENTATIVE OF THE OWNER SHALL INSPECT ALL FOOTING EXCAVATIONS FOR SUITABILITY OF BEARING SURFACES PRIOR TO PLACEMENT OF REINFORCING STEEL. PROVIDE DRAINAGE AND DEWATERING AROUND ALL WORK TO AVOID WATER-SOFTENED FOOTINGS.

FREE DRAINING BACKFILL MATERIAL FOR RETAINING & BASEMENT WALLS

A CLEAN, FREE DRAINING, WELL GRADED GRANULAR MATERIAL CONFORMING TO ASTM D2487 GW OR SW WHOSE MAXIMUM PARTICLE SIZE DOES NOT EXCEED 3/4" AND WHOSE FINES CONTENT (MATERIAL PASSING THE NO. 200 SIEVE) DOES NOT EXCEED 5%,

WITH A MAXIMUM DUST RATIO $\frac{\%\text{ PASSING U.S. NO. 200 SIEVE}}{\%\text{ PASSING U.S. NO. 40 SIEVE}} = 2/3$ MAX.

CONCRETE

CAST-IN-PLACE CONCRETE

CODES, SPECIFICATIONS, AND STANDARDS. CONCRETE WORK SHALL CONFORM TO THE FOLLOWING CODES, SPECIFICATIONS, AND STANDARDS, AND THE STANDARDS AND SPECIFICATIONS THEY REFERENCE. THE CONTRACTOR SHALL OBTAIN AND HAVE READILY AVAILABLE ON SITE THE LATEST VERSION OF THE "ACI MANUAL OF CONCRETE PRACTICE":

ACI:
1. ACI-117 'SPECIFICATIONS FOR TOLERANCES FOR CONCRETE CONSTRUCTION, MATERIALS AND COMMENTARY'.
2. ACI-301 'STANDARD SPECIFICATIONS FOR STRUCTURAL CONCRETE'.
3. ACI-302.1 'GUIDE TO CONCRETE FLOOR AND SLAB CONSTRUCTION'.
4. ACI-304 'GUIDE FOR MEASURING, MIXING, TRANSPORTING, AND PLACING CONCRETE'.
5. ACI-305.1 'SPECIFICATIONS FOR HOT WEATHER CONCRETING'.
6. ACI-306.1 'STANDARD SPECIFICATION FOR COLD WEATHER CONCRETING'.
7. ACI-308.1 'STANDARD SPECIFICATION FOR CURING CONCRETE'.
8. ACI-309 'GUIDE FOR CONSOLIDATION OF CONCRETE'.
9. ACI-311.4 'GUIDE FOR CONCRETE INSPECTION'.
10. ACI-315 'DETAILS AND DETAILING OF CONCRETE REINFORCEMENT'.
11. ACI-318 'BUILDING CODE REQUIREMENTS FOR STRUCTURAL CONCRETE'.
12. ACI-506.2 'SPECIFICATION FOR SHOTCRETING'.
13. ACI 347 'GUIDE TO FORMWORK FOR CONCRETE'.
14. ACI 303.1 'STANDARD SPECIFICATION FOR CAST-IN PLACE/ARCHITECTURAL CONCRETE'.

1. ASTM C33 'STANDARD SPECIFICATION FOR CONCRETE AGGREGATES'.
2. ASTM C94 'STANDARD SPECIFICATION FOR READY-MIX CONCRETE'.
3. ASTM C150 'STANDARD SPECIFICATION FOR PORTLAND CEMENT'.
4. ASTM C260 'STANDARD SPECIFICATION FOR AIR-ENTRAINED ADMIXTURES FOR CONCRETE'.
5. ASTM C309 'STANDARD SPECIFICATION FOR LIQUID MEMBRANE-FORMING COMPOUNDS FOR CURING CONCRETE'.
6. ASTM C494 'STANDARD SPECIFICATION FOR CHEMICAL ADMIXTURES FOR CONCRETE'.
7. ASTM C595 'STANDARD SPECIFICATION FOR BLENDED HYDRAULIC CEMENTS'.
8. ASTM C618 'STANDARD SPECIFICATION FOR ... FLY-ASH...'.
9. ASTM C989 'STANDARD SPECIFICATION FOR SLAG...'.
10. ASTM C1017 'STANDARD SPECIFICATION FOR CHEMICAL ADMIXTURES FOR USE IN PRODUCING FLOWING CONCRETE'.
11. ASTM C-1116 'STANDARD SPECIFICATION FOR FIBER-REINFORCED CONCRETE'.
12. ASTM C-1218 'STANDARD TEST METHOD FOR WATER-SOLUBLE CHLORIDE IN MORTAR AND CONCRETE'.
13. ASTM C-1315 'STANDARD SPECIFICATION FOR LIQUID MEMBRANE-FORMING COMPOUNDS HAVING SPECIAL PROPERTIES FOR CURING AND SEALING'

MIX DESIGNS: THE CONTRACTOR SHALL DESIGN CONCRETE MIXES THAT MEET OR EXCEED THE REQUIREMENTS OF THE CONCRETE MIX TABLE. THE MIX DESIGNS SHALL FACILITATE ANTICIPATED PLACEMENT METHODS, WEATHER, REBAR CONGESTION, ARCHITECTURAL FINISHES, CONSTRUCTION SEQUENCING, STRUCTURAL DETAILS, AND ALL OTHER FACTORS REQUIRED TO PROVIDE A STRUCTURALLY SOUND, AESTHETICALLY ACCEPTABLE FINISHED PRODUCT. WATER REDUCING ADMIXTURES WILL LIKELY BE REQUIRED TO MEET THESE REQUIREMENTS. CONCRETE MIX DESIGNS SHALL CLEARLY INDICATE THE TARGET SLUMP. SLUMP TOLERANCE SHALL BE ± 1-1/2 INCHES.

AGGREGATE: COARSE AND FINE AGGREGATE SHALL CONFORM TO ASTM C33

CEMENT: CEMENT SHALL CONFORM TO ASTM C150, TYPE II PORTLAND CEMENT, UNLESS NOTED OTHERWISE.

FLYASH: SHALL CONFORM TO ASTM C618 CLASS C OR F, MAXIMUM LOSS OF IGNITION SHALL BE 1.0%.

SLAG: GROUND GRANULATED BLAST-FURNACE (GGBF) SLAG SHALL CONFORM TO ASTM C989 GRADE 100 OR 120.

ALTERNATE MIX DESIGNS: VARIATIONS TO THE MIX DESIGN PROPORTIONS MAY BE ACCEPTED IF SUBSTANTIATED IN ACCORDANCE WITH ACI 318, CHAPTER 19. PROVIDE SUBMITTALS A MINIMUM OF TWO WEEKS PRIOR TO BID FOR DETERMINATION OF ACCEPTABILITY.

ADMIXTURES: ADMIXTURES SHALL BE BY MASTER BUILDERS, W.R. GRACE, OR PRE-APPROVED EQUAL. ALL MANUFACTURER'S RECOMMENDATIONS SHALL BE FOLLOWED.

WATER: SHALL BE CLEAN AND POTABLE.

MAXIMUM CHLORIDE CONTENT: THE MAXIMUM WATER SOLUBLE CHLORIDE CONTENT SHALL NOT EXCEED 0.15% BY WEIGHT OF CEMENTITIOUS MATERIAL UNLESS NOTED OTHERWISE.

CONCRETE EXPOSED TO WEATHER: PROVIDE 5.0% TOTAL AIR CONTENT FOR ALL CONCRETE EXPOSED TO WEATHER. TOTAL AIR CONTENT IS THE SUM OF ENTRAINED AIR PROVIDED BY ADMIXTURES AND NATURALLY OCCURRING ENTRAPPED AIR. AIR CONTENT SHALL BE TESTED PRIOR TO BEING PLACED IN THE PUMP HOPPER OR BUCKET; IT IS NOT REQUIRED TO BE TESTED AT THE DISCHARGE END OF THE PUMP HOSE. THE TOLERANCE ON ENTRAPPED AIR SHALL BE +2.0% AND -1.5% WITH THE AVERAGE OF ALL TESTS NOT LESS THAN THE SPECIFIED AMOUNT.

TOTAL CEMENTITIOUS MATERIAL: THE SUM OF ALL CEMENT PLUS FLYASH AND SLAG. AT THE CONTRACTORS OPTION FLYASH OR SLAG MAY BE SUBSTITUTED FOR CEMENT BUT SHALL NOT EXCEED 25% BY WEIGHT OF TOTAL CEMENTITIOUS MATERIAL. IN NO CASE SHALL THE AMOUNT OF FLYASH OR SLAG BE LESS THAN REQUIRED BY THE CONCRETE MIX DESIGN TABLE. FOOTING MIXES SHALL CONTAIN NOT LESS THAN **5 SACKS** OF CEMENTITIOUS MATERIAL PER CUBIC YARD, ALL OTHER MIXES SHALL CONTAIN NOT LESS THAN **5-1/2 SACKS** OF CEMENTITIOUS MATERIAL PER CUBIC YARD, UNLESS NOTED OTHERWISE.

ITEM	DESIGN f'c (PSI) (AT 28 DAYS U.N.O.)	MAX. W/C RATIO	MIN. FLYASH OR SLAG (PCY)	AGGREGATE GRADING ASTM AASHTO	NOTES
SLAB ON GRADE - EXPOSED TO WEATHER	5000	0.40	100	57 OR 67	1
SLABS ON GRADE - UNO	4000	0.45	100	57 OR 67	1,2,3
FOUNDATIONS - UNO	3000	0.50	--	57 OR 67	
STEM WALLS AND OTHER WALLS - UNO	4000	0.50	100	57 OR 67	
ELEVATED DECKS, TOPPING SLABS, AND SLABS ON METAL	5000	0.40	100	57 OR 67	
COLUMNS AND SHEAR WALLS	4000	0.50	--	7 OR 8	
CONTROLLED DENSITY FILL (CDF)	200	--	--	SAND	4
ALL OTHER CONCRETE	4000	0.50	--	57 OR 67	

CONCRETE MIX NOTES:

1. FIBROUS CONCRETE REINFORCEMENT SHALL BE "FIBERMESH" MANUFACTURED BY PROPEX CONCRETE SYSTEMS OR PRE-APPROVED EQUAL AND SHALL CONFORM TO ASTM C1116 TYPE III 4.1.3, PERFORMANCE LEVEL 1, AND SHALL BE 100 PERCENT VIRGIN POLYPROPYLENE, FIBRILLATED FIBERS CONTAINING NO REPROCESSED OLEFIN MATERIALS AND SPECIFICALLY MANUFACTURED FOR USE AS CONCRETE SECONDARY REINFORCEMENT. DOSAGE SHALL FOLLOW MANUFACTURER'S RECOMMENDATION BUT NOT LESS THAN 1.5 LB/CU. YD.
2. MAXIMUM WATER CONTENT 240 PCY.
3. MAXIMUM SAND/AGGREGATE PERCENTAGE SHALL BE 40%, AND SHALL CONTAIN A MID-RANGE WATER REDUCING ADMIXTURE WITH A DOSAGE HIGH ENOUGH TO REDUCE WATER A MINIMUM OF 10%.
4. SAND - CEMENT CONCRETE GROUT.

CONCRETE PLACEMENT

PLACE CONCRETE FOLLOWING ALL APPLICABLE ACI RECOMMENDATIONS. CONCRETE SHALL BE PROPERLY CONSOLIDATED PER ACI 309 USING INTERIOR MECHANICAL VIBRATORS, DO NOT OVER-VIBRATE. CONCRETE SHALL BE POURED MONOLITHICALLY BETWEEN CONSTRUCTION OR EXPANSION JOINTS. IF CONCRETE IS PLACED BY THE PUMP METHOD, HORSES SHALL BE PROVIDED TO SUPPORT THE HOSE, THE HOSE SHALL NOT BE ALLOWED TO RIDE ON THE REINFORCING. WEATHER FORECASTS SHALL BE MONITORED AND ACI RECOMMENDATIONS FOR HOT AND COLD WEATHER CONCRETING SHALL BE FOLLOWED AS REQUIRED. CONCRETE SHALL NOT FREE FALL MORE THAN 5 FEET DURING PLACEMENT WITHOUT WRITTEN APPROVAL OF STRUCTURAL ENGINEER.

FLOATING & FINISHING OPERATIONS

WATER SHALL NOT BE ADDED TO THE CONCRETE SURFACE DURING FLOATING & FINISHING OPERATIONS. PRE-APPROVED EVAPORATION RETARDER SPECIFICALLY DESIGNED FOR FLOATING & FINISHING OPERATIONS ARE ACCEPTABLE.

FORMED SURFACES:

FORMWORK CLASS OF SURFACE PER ACI 347 TABLE 3.1	
ITEM	CLASS OF FINISH
ALL SURFACES EXPOSED TO PUBLIC VIEW, U.N.O.	A
ALL SURFACES RECEIVING A COURSE TEXTURED COATING SUCH AS PLASTER OR STUCCO, UNLESS NOTED OTHERWISE	B
ALL OTHER SURFACES, UNLESS NOTED OTHERWISE	C

FORMWORK STRIPPING:

COLUMNS & WALLS: COLUMNS AND WALLS NOT SUPPORTING FRAMING WEIGHT MAY BE STRIPPED AS SOON AS FORMS CAN BE REMOVED WITHOUT DAMAGING THE CONCRETE AND THE CONCRETE HAS REACHED A MINIMUM COMPRESSIVE STRENGTH OF 500 PSI.

BEAMS & SLABS: BEAMS AND SLABS MAY BE STRIPPED AND BECOME SELF SUPPORTING AS SOON AS THEIR COMPRESSIVE STRENGTH REACHES 75% OF THE SPECIFIED DESIGN STRENGTH. RESHORING SHALL BE PROVIDED FOR ALL CONSTRUCTION LOADS THEREAFTER PER THE GENERAL CONTRACTOR.

COLD WEATHER PLACEMENT:

1. COLD WEATHER IS DEFINED BY ACI 306 AS "A PERIOD WHEN FOR MORE THAN 3 SUCCESSIVE DAYS THE MEAN DAILY TEMPERATURE DROPS BELOW 40° F."
2. NO CONCRETE SHALL BE PLACED ON FROZEN OR PARTIALLY FROZEN GROUND. THAWING THE GROUND WITH HEATERS IS PERMISSIBLE.
3. CONCRETE MIX TEMPERATURES SHALL BE AS SHOWN BELOW. HEATING OF WATER AND/OR AGGREGATES MAY BE REQUIRED TO ATTAIN THESE TEMPERATURES.
4. THE CONCRETE MAY REQUIRE PROTECTION FOR 4-7 DAYS AFTER POURING. IF TEMPERATURES REMAIN BELOW FREEZING, INSULATING BLANKET COVERAGE IS REQUIRED. IF TEMPERATURES ARE SLIGHTLY BELOW FREEZING (30° F MIN.) AT NIGHT AND ABOVE FREEZING DURING THE DAY, KRAFT PAPER WITH COMPLETE COVERAGE MAY BE USED IN LIEU OF INSULATED BLANKETS.
5. NO ADDITIVES CONTAINING CHLORIDES SHALL BE USED. USE "POZZUTEC 20+" BY MASTER BUILDERS OR "POLARSET" BY W.R. GRACE OR PRE-APPROVED EQUAL.

CONDITION OF PLACEMENT AND CURING		WALLS & SLABS	FOOTINGS
MIN. TEMP. FRESH CONCRETE AS MIXED FOR WEATHER INDICATED, DEGREES F.	ABOVE 30° F.	60°	55°
	0° TO 30° F.	65°	60°
	BELOW 0° F.	70°	65°
MIN. TEMP. FRESH CONCRETE AS PLACED AND MAINTAINED, DEGREES F.		55°	50°
MAX. ALLOWABLE GRADUAL DROP IN TEMP. THROUGHOUT FIRST 24 HOURS AFTER END OF PROTECTION, DEGREES F.		50°	40°

HOT OR WINDY WEATHER PLACEMENT

HOT WEATHER IS DEFINED BY ACI 305 AS "ANY COMBINATION OF HIGH AIR TEMPERATURE, LOW RELATIVE HUMIDITY, AND WIND VELOCITY, TENDING TO IMPAIR THE QUALITY OF FRESH HARDENED CONCRETE. ACI 305 FIGURE 2.1.5 SHALL BE USED BY THE CONTRACTOR TO ESTIMATE THE RATE OF EVAPORATION. WHEN THE ESTIMATED RATE OF EVAPORATION IS GREATER THAN O.2 PSF/HOUR THE PLACEMENT SHALL BE CONSIDERED A HOT WEATHER PLACEMENT. PRECAUTIONS AGAINST PLASTIC SHRINKAGE CRACKING ARE NECESSARY. PRECAUTIONS TAKEN BY THE CONTRACTOR VARY DEPENDING UPON THE FACTORS ASSOCIATED WITH WATER EVAPORATION AND INCLUDE BUT ARE NOT LIMITED TO:

1. LIMITING CONCRETE TEMPERATURE TO 100°F AT TIME OF PLACEMENT.
2. APPLICATION OF AN EVAPORATION RETARDER.
3. USE OF FOG SPRAY.
4. REDUCTION OF POUR SIZE.
5. PLACING CONCRETE AT NIGHT.

CONTROL AND CONSTRUCTION JOINTS

CONSTRUCTION JOINTS SHALL MEET THE REQUIREMENTS OF ACI 301 SECTIONS 2.2.2.5 AND 5.3.2.6. SPECIAL BONDING METHODS PER SECTION 5.3.2.6 SHALL BE SATISFIED BY ITEM 4 BELOW UNLESS OTHERWISE DETAILED ON THE STRUCTURAL DRAWINGS. WHERE CONSTRUCTION JOINTS ARE NOT SHOWN ON PLAN OR ADDITIONAL CONSTRUCTION JOINTS ARE REQUIRED SUBMIT PROPOSED JOINTING FOR STRUCTURAL ENGINEERS APPROVAL. PROVIDE CONSTRUCTION JOINTS AS INDICATED BELOW UNLESS NOTED OTHERWISE ON THE PLANS:

1. SLABS ON GRADE: PROVIDE CONSTRUCTION AND/OR CONTROL JOINTS AT 16 FEET O.C. MAXIMUM FOR UNEXPOSED SLABS ON GRADE AND 12 FEET O.C. FOR EXPOSED SLABS ON GRADE. COORDINATE JOINTS WITH ARCHITECTURAL DRAWINGS.
2. WALLS AND COLUMNS: COORDINATE CONSTRUCTION JOINTS WITH ARCHITECTURAL REVEALS.
3. BONDING AGENT: WHERE BONDING AGENT IS SPECIFICALLY CALLED OUT ON THE STRUCTURAL DRAWINGS USE "WELD CRETE" BY LARSON PRODUCTS CORPORATION OR PRE-APPROVED EQUAL. FOLLOW ALL MANUFACTURERS RECOMMENDATIONS.
4. ATTACHMENT OF NEW CONCRETE TO EXISTING: WHERE SHOWN, ROUGHEN CONCRETE TO A MINIMUM AMPLITUDE OF 1/4" USING IMPACT HAMMER. REMOVE ALL LOOSE OR DAMAGED CONCRETE, THOROUGHLY FLUSH ALL SURFACES WITH POTABLE WATER, AIR BLAST WITH OIL FREE COMPRESSED AIR TO REMOVE ALL WATER.
5. SLAB ON METAL DECK: SHALL NOT BE SAW CUT UNLESS SPECIFICALLY CALLED OUT ON DRAWINGS.

EMBEDDED ITEMS

1. NO ALUMINUM ITEMS SHALL BE EMBEDDED IN ANY CONCRETE.
2. ALL EMBED PLATES SHALL BE SECURELY FASTENED IN PLACE.
3. ALL EMBEDDED STEEL ITEMS EXPOSED TO EARTH SHALL BE GALVANIZED.
4. ALL EMBEDDED STEEL ITEMS EXPOSED TO WEATHER SHALL BE PAINTED UNLESS NOTED AS GALVANIZED. SEE DRAWINGS AND SPECIFICATIONS FOR PAINT, PRIMER, AND GALVANIZING REQUIREMENTS.
5. EMBEDDED CONDUIT IS NOT PERMITTED IN CONCRETE SLABS ON METAL DECK UNLESS SPECIFICALLY NOTED ON THE STRUCTURAL DRAWINGS.

CONCRETE CURING AND SEALING

CURING PROCEDURES SHALL COMMENCE IMMEDIATELY AFTER FINISHING CONCRETE TO MAINTAIN CONCRETE IN A MOIST CONDITION. VERIFY CURING AND/OR SEALING PRODUCTS ARE COMPATIBLE WITH FLOOR COVERINGS SHOWN ON THE ARCHITECTURAL DRAWINGS. FOLLOW ALL MANUFACTURER'S RECOMMENDATIONS. SLABS ARE DEFINED AS SLABS ON GRADE, CONCRETE ON METAL DECK, ELEVATED POST-TENSIONED OR MILD REINFORCED DECKS, AND TOPPING SLABS.

ITEM	CONCRETE CURING NOTES
SLABS EXPOSED TO EARTH OR WEATHER OR VEHICLE OR FORKLIFT TRAFFIC INCLUDING LOADING DOCKS	1, (3 OR 4 OR 5), 6
ALL OTHER SLABS	1, (3 OR 4 OR 5)
FORMED SURFACES EXCLUDING FOUNDATIONS	2
SHOTCRETE WALLS	4
ALL OTHER CONCRETE	NONE

CONCRETE CURING NOTES:

1. WHEN THE ESTIMATED EVAPORATION RATE IS GREATER THAN 0.2 PSF/HOUR PROVIDE A SPRAY APPLIED EVAPORATION RETARDER IMMEDIATELY AFTER CONCRETE PLACEMENT. THE EVAPORATION RATE MAY BE CALCULATED PER ACI 305 FIGURE 2.1.5.
2. APPLY A LIQUID MEMBRANE FORMING CURING COMPOUND, CONFORMING TO ASTM C309 TYPE 1 CLASS B SPECIFICATIONS, PER MANUFACTURER'S RECOMMENDATIONS TO ALL FORMED SURFACES IMMEDIATELY AFTER FINAL FORM REMOVAL. NOT REQUIRED IF FORMWORK REMAINS IN PLACE FOR MORE THAN 7 DAYS.
3. PROVIDE PRE-APPROVED CONTINUOUS WET CURE METHOD FOR A MINIMUM OF 14 DAYS.
4. APPLY A LIQUID MEMBRANE FORMING CURING COMPOUND, CONFORMING TO ASTM C309 TYPE 1 CLASS B SPECIFICATIONS OR ASTM C1315 TYPE 1 CLASS A SPECIFICATIONS, PER MANUFACTURER'S RECOMMENDATIONS IMMEDIATELY AFTER FINAL FINISHING. CURING COMPOUND SHALL BE COMPATIBLE WITH ARCHITECTURAL FLOOR COVERINGS AND SEALERS.
5. PROVIDE 'ULTRACURE MAX' MOISTURE RETAINING COVER BY MCTECH GROUP, OR APPROVED EQUAL, FOR A MINIMUM OF 14 DAYS.
6. APPLY A SILANE SEALER WITH MINIMUM SOLIDS CONTENT OF 40% PER MANUFACTURER'S RECOMMENDATIONS.

GROUT

NON-SHRINK GROUT: MASTER BUILDERS "MASTERFLOW 928" OR PRE-APPROVED EQUAL. GROUT SHALL CONFORM TO CRD-C621 AND ASTM C1107 WHEN TESTED AT A FLUID CONSISTENCY PER CRD-C611-85 FOR 30 MINUTES. GROUT MAY BE PLACED FROM A 25 SECOND FLOW TO A STIFF PACKING CONSISTENCY. FILL OR PACK ENTIRE SPACE UNDER PLATES OR SHAPES. FOLLOW MANUFACTURER'S RECOMMENDATIONS FOR PREPARATION, INSTALLATION, AND CURING.

STRUCTURAL DRAWING INDEX

SHEET NUMBER	SHEET DESCRIPTION
S1.01	GENERAL NOTES
S1.02	GENERAL NOTES
S1.03	GENERAL NOTES
S3.11	FOUNDATION PLAN
S3.12	FIRST FLOOR SLAB/FRAMING PLAN
S3.13	SECOND FLOOR FRAMING PLAN
S3.14	ROOF FRAMING PLAN
S4.01	FOUNDATION DETAILS
S4.02	FOUNDATION DETAILS
S4.03	FOUNDATION DETAILS
S4.04	FOUNDATION DETAILS
S5.01	STEEL DETAILS
S5.02	STEEL DETAILS
S6.01	FLOOR FRAMING DETAILS
S7.01	ROOF FRAMING DETAILS
S7.02	ROOF FRAMING DETAILS
S7.03	ROOF FRAMING DETAILS
S8.01	STEEL BRACED FRAME ELEVATIONS
S8.11	STEEL BRACED FRAME DETAILS
S8.12	STEEL BRACED FRAME DETAILS
S9.01	COLD FORMED STEEL FRAMING DETAILS
S9.02	COLD FORMED STEEL FRAMING DETAILS
S9.03	COLD FORMED STEEL FRAMING DETAILS
Grand total: 23	

REVISIONS

CONFORMED SET

WESTERN STATE HO

REINFORCING STEEL

REINFORCING STEEL SHALL CONFORM TO:

ASTM A615, GRADE 60 TYPICAL UNLESS NOTED OTHERWISE.

ASTM A615 GRADE 40 WHERE NOTED AS Fy = 40 ON DRAWINGS, HIGHER GRADES MAY NOT BE SUBSTITUTED.

ASTM A706 GRADE 60 FOR ALL WELDED BARS.

DETAIL FABRICATE AND PLACE PER ACI 315 AND ACI 318.

WELDED WIRE REINFORCEMENT SHALL CONFORM TO ASTM A185. LAP ONE FULL MESH ON SIDES AND ENDS BUT NOT LESS THAN 8 INCHES. WELDED WIRE REINFORCING SHALL BE SUPPORTED TO WITHSTAND CONCRETE PLACEMENT. PULLING OF MESH INTO PLACE AFTER PLACEMENT IS NOT ALLOWED.

REINFORCING SPLICE AND DEVELOPMENT LENGTH SCHEDULE, Fy=60 KSI (UNLESS NOTED OTHERWISE)

BAR SIZE	MINIMUM LAP SPLICE LENGTHS		MINIMUM DEVELOPMENT LENGTHS		MINIMUM EMBEDMENT LENGTH FOR STANDARD END HOOKS ("Ldh")
	TOP BARS	OTHER	TOP BARS	OTHER	
#3	2'-0"	1'-6"	1'-6"	1'-3"	0'-7"
#4	2'-8"	2'-0"	2'-0"	1'-7"	0'-9"
#5	3'-4"	2'-7"	2'-7"	2'-0"	1'-0"
#6	4'-0"	3'-1"	3'-1"	2'-4"	1'-2"
#7	5'-	4'-6"	4'-6"	3'-6"	1'-5"
#8	6'-8"	5'-2"	5'-2"	3'-	1'-7"
#9	7'-6"	5'-	5'-	4'-6"	1'-9"
#10	8'-6"	6'-6"	6'-6"	5'-0"	2'-0"
#11	9'-5"	7'-3"	7'-3"	5'-7"	2'-3"

SPLICE TABLE NOTES:

1. "TOP BARS" ARE HORIZONTAL BARS WITH MORE THAN 12" DEPTH OF CONCRETE CAST BELOW

MECHANICAL COUPLERS: "LENTON" BY ERICO, "CADWELD" BY ERICO, "BAR-LOCK" BY DAYTON SUPERIOR L-SERIES, OR PRE-APPROVED EQUAL. COUPLERS SHALL BE TYPE 2 PER ACI 318 SECTION 18.2.7.1.

WELDED HALF COUPLERS: "LENTON" BY ERICO WELDABLE HALF COUPLERS TYPE C2/C3J OR APPROVED EQUAL.

FORM SAVERS: "LENTON" BY ERICO THREADED FORM SAVERS TYPE FS OR APPROVED

REINFORCING STEEL COVER

PROVIDE CONCRETE COVER OVER REINFORCEMENT AS FOLLOWS, UNLESS NOTED OTHERWISE:

CONCRETE CAST AGAINST EARTH ---------- 3"
EXPOSED TO WEATHER OR EARTH ---------- 2"
TIES ON BEAMS AND COLUMNS ---------- 1-1/2"
WALLS AND SLABS NOT EXPOSED TO WEATHER---- 3/4"

POST-INSTALLED ANCHORS

POST-INSTALLED ANCHORS: SHALL ONLY BE USED WHERE SPECIFIED ON THE CONSTRUCTION DOCUMENTS. THE CONTRACTOR SHALL OBTAIN APPROVAL FROM THE STRUCTURAL ENGINEER PRIOR TO INSTALLING POST-INSTALLED ANCHORS IN PLACE OF MISSING OR MISPLACED CAST-IN-PLACE ANCHORS. CARE SHALL BE TAKEN IN PLACING POST-INSTALLED ANCHORS TO AVOID CONFLICTS WITH REBAR. INSTALL IN ACCORDANCE WITH THE MANUFACTURER'S PUBLISHED INSTALLATION INSTRUCTIONS. INSTALLER SHALL BE QUALIFIED AND TRAINED BY THE MANUFACTURER. HOLES SHALL BE HAMMER DRILLED ONLY (ROTARY DRILLED ONLY AT UNREINFORCED MASONRY - NO HAMMER TOOLS).

SUBSTITUTION REQUESTS, FOR PRODUCTS OTHER THAN THOSE SPECIFIED BELOW, SHALL BE SUBMITTED FOR APPROVAL A MINIMUM OF 2 WEEKS PRIOR TO BID, ALONG WITH CALCULATIONS THAT ARE PREPARED AND SEALED BY A REGISTERED PROFESSIONAL ENGINEER (LICENSED IN THE STATE IN WHICH THE PROJECT OCCURS) DEMONSTRATING THAT THE SUBSTITUTED PRODUCT IS CAPABLE OF ACHIEVING EQUIVALENT PERFORMANCE VALUES (MINIMUM) OF THE SPECIFIED PRODUCT USING THE APPROPRIATE DESIGN PROCEDURE AND/OR STANDARD(S) AS REQUIRED BY THE BUILDING CODE.

CONCRETE ANCHORS:
- ADHESIVE ANCHORS: HILTI HIT-HY 200 (ICC-ESR-3187)
  *CONCRETE SHALL BE A MINIMUM OF 21 DAYS OLD AT TIME OF INSTALLATION.
  *CONCRETE SHALL BE IN THE TEMPERATURE RANGE AS REQUIRED BY THE CONCRETE MANUFACTURER.
  *HOLE SHALL BY HAMMER-DRILLED ONLY.
  *HOLE SHALL BE DRY AT TIME OF INSTALLATION.
  *INSTALLER OF HORIZONTAL OR UPWARDLY INCLINED (ANY POSITION EXCEPT DIRECTLY DOWNWARD) ANCHORS SHALL ALSO BE CERTIFIED BY THE ACI/CRSI ADHESIVE ANCHOR INSTALLER CERTIFICATION PROGRAM.
- EXPANSION ANCHORS: KWIKBOLT TZ (ICC ESR-1917) BY HILTI, INC., OR STRONG-BOLT 2 (ICC ESR-3037) BY SIMPSON STRONG TIE, INC.

STRUCTURAL STEEL

DETAILING, FABRICATION AND ERECTION

ALL WORKMANSHIP SHALL CONFORM TO THE AISC MANUAL OF STEEL CONSTRUCTION, 14TH EDITION, THE AISC SPECIFICATION FOR STRUCTURAL STEEL BUILDINGS JUNE 22, 2010, THE AISC CODE OF STANDARD PRACTICE, APRIL 14, 2010 AND THE AISC SEISMIC PROVISIONS FOR STRUCTURAL STEEL BUILDINGS, JUNE 22, 2010.

STEEL MEMBERS ARE EQUALLY SPACED BETWEEN COLUMNS AND/OR DIMENSION POINTS UNLESS NOTED OTHERWISE.

THE CONTRACTOR SHALL BE RESPONSIBLE FOR ALL ERECTION AIDES AND JOINT PREPARATIONS THAT INCLUDE BUT ARE NOT LIMITED TO, ERECTION ANGLES, LIFT HOLES, AND OTHER AIDES, WELDING PROCEDURES, REQUIRED ROOT OPENINGS, ROOT FACE DIMENSIONS, GROOVE ANGLES, BACKING BARS, WELD EXTENSION TABS, COPES, SURFACE ROUGHNESS VALUES AND TAPERS OF UNEQUAL PARTS. THE CONTRACTOR SHALL BE RESPONSIBLE FOR THE COMPLIANCE WITH ALL CURRENT OSHA REQUIREMENTS.

HOLES, COPES OR OTHER CUTS OR MODIFICATIONS OF THE STRUCTURAL STEEL MEMBERS SHALL NOT BE MADE IN THE FIELD WITHOUT WRITTEN APPROVAL FROM THE STRUCTURAL ENGINEER.

STEEL FABRICATORS

ALL STEEL FABRICATION SHALL BE PERFORMED BY A FABRICATOR CERTIFIED BY THE AMERICAN INSTITUTE OF STEEL CONSTRUCTION. THE FABRICATOR SHALL BE DESIGNATED AN AISC CERTIFIED PLANT, CATEGORY STD AT THE TIME OF BID AND SHALL MAINTAIN THIS CERTIFICATION FOR THE DURATION OF THE PROJECT.

NON-AISC CERTIFIED STEEL FABRICATORS SHALL HAVE FIVE YEARS MINIMUM EXPERIENCE ON SIMILAR PROJECTS OF EQUAL OR LARGER COMPLEXITY AND SCOPE. QUALIFICATIONS SHALL BE SUBMITTED TWO WEEKS PRIOR TO BID.

STEEL ERECTORS

ALL STEEL ERECTION SHALL BE PERFORMED BY AN ERECTOR CERTIFIED BY THE AMERICAN INSTITUTE OF STEEL CONSTRUCTION. THE ERECTOR SHALL BE DESIGNATED AN AISC CERTIFIED ERECTOR, CATEGORY CSE AT THE TIME OF BID AND SHALL MAINTAIN THIS CERTIFICATION FOR THE DURATION OF THE PROJECT.

NON-AISC CERTIFIED STEEL ERECTORS SHALL HAVE FIVE YEARS MINIMUM EXPERIENCE ON SIMILAR PROJECTS OF EQUAL OR LARGER COMPLEXITY AND SCOPE. QUALIFICATIONS SHALL BE SUBMITTED TWO WEEKS PRIOR TO BID.

STEEL DETAILERS

ALL STEEL DETAILING SHALL BE PERFORMED BY A DETAILER WITH FIVE YEARS MINIMUM EXPERIENCE ON SIMILAR PROJECTS OF EQUAL OR LARGER COMPLEXITY AND SCOPE. QUALIFICATIONS SHALL BE SUBMITTED TWO WEEKS PRIOR TO BID.

MATERIAL PROPERTIES

WIDE FLANGE SECTIONS: ASTM A992 (Fy = 50 KSI)

OTHER SHAPES AND PLATES: ASTM A36 (Fy = 36 KSI) TYP. U.N.O.; ASTM A572 (Fy = 50 KSI) WHERE INDICATED

HOLLOW STRUCTURAL SECTIONS: RECTANGULAR & SQUARE - ASTM A500 GRADE B (Fy = 46 KSI) ROUND - ASTM A500 GRADE B (Fy = 42 KSI)

STRUCTURAL STEEL PIPES: ASTM A53, GRADE B, TYPE E OR S (Fy = 35 KSI)

MACHINE BOLTS (M.B.): ASTM A307, GRADE A

HIGH-STRENGTH BOLTS: A325-ASTM F1852, A490-ASTM F2280

ANCHOR BOLTS (A.B.): ASTM F1554, GRADE 36, UNLESS OTHERWISE NOTED, ASTM F1554, GRADE 55 WHERE INDICATED.

WIDE FLANGE STRUCTURAL MEMBERS WHICH ARE ASTM A6 GROUP 3 SHAPES WITH FLANGE THICKNESS 1-1/2" THICK AND THICKER, AND ALL ASTM A6 GROUP 4 AND 5 SHAPES AND PLATE THAT IS 1-1/2" THICK OR THICKER SHALL HAVE A CHARPY V-NOTCH (CVN) TOUGHNESS OF 20 FT-LBS @ 70 DEG F.

WELDING

STRUCTURAL STEEL: WELD IN ACCORDANCE WITH "STRUCTURAL WELDING CODE" AWS D1.1.

STRUCTURAL STEEL LATERAL FRAME: WELD IN ACCORDANCE WITH "STRUCTURAL WELDING CODE SEISMIC SUPPLEMENT" AWS D1.8.

REINFORCING STEEL: WELD IN ACCORDANCE WITH "REINFORCING STEEL WELDING CODE" AWS D1.4. WELD ONLY WITH SPECIFIC APPROVAL OF THE STRUCTURAL ENGINEER. IN NO CASE SHALL A WELD BE MADE WITHIN 6 BAR DIAMETERS OF A "COLD BEND".

CERTIFICATION: ALL WELDING SHALL BE PERFORMED BY WABO/AWS CERTIFIED WELDERS. WELDERS SHALL BE PREQUALIFIED FOR EACH POSITION AND WELD TYPE WHICH THE WELDER WILL BE PERFORMING.

WELD TABS (ALSO KNOWN AS WELD "EXTENSION" TABS OR "RUN OFF" TABS) SHALL BE USED. AFTER THE WELD HAS BEEN COMPLETED THE WELD TABS SHALL BE REMOVED AND THE WELD END GROUND TO A SMOOTH CONTOUR. WELD "DAMS" OR "END DAMS" SHALL NOT BE USED.

THE PROCESS CONSUMABLES FOR ALL WELD FILLER METAL INCLUDING TACK WELDS, ROOT PASS AND SUBSEQUENT PASSES DEPOSITED IN A JOINT SHALL BE COMPATIBLE.

ALL WELD FILLER METAL AND WELD PROCESS SHALL PROVIDE THE TENSILE STRENGTH CHARPY V-NOTCH RATINGS AS FOLLOWS:

GRAVITY FRAME

WELD	FILLER METAL TENSILE	CHARPY V-NOTCH (CVN)
FILLET	70	-----
PARTIAL PENETRATION	70	-----
COMPLETE PENETRATION	70	20 FT-LBS @ -20 DEG

LATERAL FRAME

WELD	FILLER METAL TENSILE	CHARPY V-NOTCH (CVN)
FILLET	70	20 FT-LBS @ -20 DEG
PARTIAL PENETRATION	70	20 FT-LBS @ -20 DEG
COMPLETE PENETRATION	70	20 FT-LBS @ -20 DEG F AND 40 FT-LBS @ 70 DEG F

WELDED CONNECTIONS INSPECTION:

1. ALL WELDING SHALL BE CHECKED BY VISUAL MEANS AND BY OTHER METHODS DEEMED NECESSARY BY THE WELDING INSPECTOR.
2. ALL FULL PENETRATION WELDS TO MEMBERS WHICH FORM A PORTION OF THE LATERAL LOAD RESISTING FRAME SHALL BE CHECKED 100 PERCENT BY ULTRASONIC TESTING.
3. THE CONTRACTOR SHALL SUBMIT A WRITTEN WELDING PROCEDURE SPECIFICATION FOR SHOP AND FIELD WELDING OF ALL LATERAL LOAD RESISTING FRAME CONNECTIONS FOR APPROVAL TO THE STRUCTURAL ENGINEER OF RECORD PRIOR TO FABRICATION.

THE STANDARDS OF ACCEPTANCE FOR WELDS TESTED BY ULTRASONIC METHODS SHALL CONFORM TO AWS D1.1.

ALL WELDS FOUND TO BE DEFECTIVE SHALL BE REPAIRED AND REINSPECTED BY THE SAME METHODS ORIGINALLY USED, AND THIS REPAIR AND REINSPECTION SHALL BE PAID FOR BY THE CONTRACTOR.

MASONRY

MASONRY VENEER: SHALL CONFORM TO THE REQUIREMENTS OF IBC CHAPTER 14, AND THE PROJECT SPECIFICATIONS.

MORTAR: SHALL BE TYPE N PER IBC. CONFORM TO ASTM C270. MINIMUM COMPRESSIVE STRENGTH = 1800 PSI.

ANCHORED VENEER (MASONRY AND STONE UNITS): ALL VENEER ANCHORAGE ATTACHMENTS SHALL CONFORM TO IBC SECTION 1405.6 AND ACI 530 SECTIONS 12.1 AND 12.2 FOR THE APPLICABLE SEISMIC DESIGN CATEGORY.

ANCHOR TIES AND JOINT REINFORCEMENT SHALL BE HOT-DIPPED GALVANIZED PER ASTM A153, CLASS B-2 AND SHALL BE MANUFACTURED BY WIRE-BOND OR LOCK RITE OR PRE-APPROVED EQUAL. ANCHOR TIES SHALL BE SPACED 16"O.C. EACH WAY MAXIMUM, AND SHALL HAVE A LIP OR HOOK ON THE EXTENDED LEG THAT WILL ENGAGE OR ENCLOSE A HORIZONTAL JOINT REINFORCEMENT WIRE OF NO. 9 GAUGE OR EQUIVALENT. THE JOINT REINFORCEMENT SHALL BE CONTINUOUS WITH BUTT SPLICES BETWEEN TIES PERMITTED.

ANCHORAGE OF VENEER TO BACKING SHALL BE AS FOLLOWS:

BACKING	VENEER TIE	ATTACHMENT TO BACKING
METAL STUDS	WIRE-BOND RJ-711 OR HOHMANN & BARNARD HB-213 S.I.S.	ZINC PLATED SCREWS BY MANUFACTURER
STRUCTURAL STEEL	WIRE-BOND TYPE I WELD ON ANCHOR W/ TRIANGULAR TIE & WIRE-BOND CLIP OR HOHMANN & BARNARD HB-359 WELD ON ANCHOR W/ VEE BYNA-TIE	WELD ON CLIP

ANCHOR VENEER WITH CAVITY WIDTH GREATER THAN 4-1/2": WHERE THE CAVITY WIDTH BETWEEN THE EXTERIOR FACE OF THE STRUCTURAL BACKING WALL AND THE INTERIOR FACE OF THE VENEER IS GREATER THAN 4-1/2", VENEER ANCHORAGE SYSTEMS SHALL BE DESIGNED PER THE REQUIREMENTS OF CURRENT CODE AND THE PROJECT SPECIFICATIONS. PROVIDE CALCULATIONS AND SHOP DRAWINGS INDICATING THE TYPE, SIZE, AND REQUIRED SPACING OF VENEER ANCHORS. CALCULATIONS AND SHOP DRAWINGS SHALL BE PRODUCED UNDER THE SUPERVISION OF AND SHALL BEAR THE STAMP OF A PROFESSIONAL ENGINEER REGISTERED IN THE STATE OF PROJECT.

GENERAL REQUIREMENTS

HIGH-STRENGTH BOLTS: ALL A325 HIGH-STRENGTH BOLTS (HSB) SHALL BE ASTM F1852, UNLESS OTHERWISE DESIGNATED AS A490. ALL HSB DESIGNATED AS A490 SHALL BE ASTM F2280. ALL HSB SHALL BE BY "LEJEUNE BOLT COMPANY" OR PRE-APPROVED EQUAL AND SHALL BE INSTALLED PER SECTION 8.2 OF THE "SPECIFICATION FOR STRUCTURAL JOINTS USING ASTM A325 OR A490 BOLTS", JUNE 2004 BY THE RESEARCH COUNCIL ON STRUCTURAL CONNECTIONS (RCSC SPECIFICATION). ALL BOLT HOLES SHALL BE STANDARD ROUND HOLES UNLESS NOTED OTHERWISE. THE FAYING SURFACES OF ALL PLIES WITHIN THE GRIP OF SLIP-CRITICAL BOLTS (A325SC OR A490SC) SHALL MEET THE REQUIREMENTS FOR A CLASS A SURFACE PER SECTION 3.2 OF THE RCSC

BOLTED CONNECTIONS INSPECTION: CONNECTIONS MADE WITH BEARING TYPE BOLTS SHALL BE INSPECTED PER SECTION 9.1 AND CONNECTIONS MADE WITH SLIP-CRITICAL TYPE BOLTS (A325SC OR A490SC) SHALL BE INSPECTED PER SECTION 9.3 OF RCSC SPECIFICATION.

EPOXY GROUTED ANCHORS: ASTM F1554, GRADE 36 UNLESS NOTED

HEADED STUDS: SHALL BE "H4L HEADED CONCRETE ANCHORS" FOR STUDS 5/8" DIAMETER AND SMALLER AND "S3L SHEAR CONNECTORS" FOR STUDS 3/4" DIAMETER AND LARGER AS MANUFACTURED BY NELSON STUD WELDING, INC. OR PRE-APPROVED EQUAL AND SHALL CONFORM TO AWS D1.1. ALL HEADED STUDS SHALL BE INSTALLED PER MANUFACTURER'S RECOMMENDATIONS USING A NELSON WELD GUN, UNLESS NOTED OTHERWISE ON DETAILS. ALL WELDS SHALL BE MADE AND INSPECTED IN ACCORDANCE WITH AWS D1.1.

DEFORMED BAR ANCHORS: SHALL BE "D2L DEFORMED BAR ANCHORS" AS MANUFACTURED BY NELSON STUD WELDING, INC. OR PRE-APPROVED EQUAL AND SHALL CONFORM TO AWS D1.1. ALL DEFORMED BAR ANCHORS SHALL BE INSTALLED PER MANUFACTURER'S RECOMMENDATIONS USING A NELSON WELD GUN, UNLESS NOTED OTHERWISE ON DETAILS. ALL WELDS SHALL BE MADE AND INSPECTED IN ACCORDANCE WITH AWS D1.1.

FINISH: STRUCTURAL STEEL SHALL BE UNPAINTED, UNLESS NOTED OTHERWISE, AND SHALL BE CLEAN OF LOOSE RUST, LOOSE MILL SCALE, OIL, GREASE AND OTHER FOREIGN SUBSTANCES AND SHALL MEET THE REQUIREMENTS OF SSPC-SP1. WHERE STRUCTURAL STEEL IS NOTED TO BE PAINTED, ALL AREAS COMPRISING THE FAYING SURFACES OF BOLTED CONNECTIONS MADE WITH SLIP-CRITICAL TYPE BOLTS (A325SC OR A490SC) SHALL COMPLY WITH THE REQUIREMENTS OF THE RCSC SPECIFICATION. WHERE STRUCTURAL STEEL IS NOTED TO BE GALVANIZED, IT SHALL BE HOT-DIP GALVANIZED IN ACCORDANCE WITH ASTM A123, A384, AND A385. ALL SURFACES WITHIN TWO INCHES OF ANY FIELD WELD LOCATION SHALL BE FREE OF MATERIALS THAT WOULD PREVENT PROPER WELDING OR PRODUCE OBJECTIONABLE FUMES. FIELD TOUCH-UP OF PRIMED, PAINTED, AND GALVANIZED SURFACES SHALL BE PERFORMED TO REPAIR COATING ABRASIONS, AS WELL AS TO PROTECT ALL AREAS AT CONNECTIONS.

METAL JOISTS: SHALL BE MANUFACTURED BY CANAM STEEL CORPORATION, VULCRAFT A DIVISION OF NUCOR CORPORATION OR PRE-APPROVED EQUAL, AND SHALL CONFORM TO THE STEEL JOIST INSTITUTE (SJI) AND AMERICAN INSTITUTE OF STEEL CONSTRUCTION (AISC) STANDARDS AND CRITERIA LISTED IN THE CONTRACT DOCUMENTS AND SHALL BE DESIGNED TO CARRY THE LOADS LISTED IN THE DESIGN CRITERION AND THOSE INDICATED ON THE FRAMING PLANS. JOIST MANUFACTURER SHALL VERIFY AND INCLUDE FIRE RATING STRESS REDUCTIONS AND SIZE LIMITATIONS IN ORDER TO CONFORM TO THE ASSEMBLY REQUIREMENTS AS SHOWN ON THE ARCHITECTURAL DRAWINGS. AT A MINIMUM PROVIDE BRACING TO WITHSTAND A NET WIND UPLIFT OF 10 PSF AND/OR 15 PSF WITHIN 10' OF ALL RIDGES, EAVES, ENDWALLS AND ROOF STEPS. FOR OTHER SPECIAL REQUIREMENTS, SEE STRUCTURAL DRAWINGS. ALL LOADS INDICATED ON THE FRAMING PLANS THAT ARE NOT DIMENSIONED ARE TO BE DESIGNATED AS ADLOADS BY THE METAL JOIST MANUFACTURER. JOISTS SHALL BE DESIGNED AND DETAILED TO MEET ALL CURRENT OSHA STANDARDS. THE GENERAL CONTRACTOR SHALL COORDINATE ALL OSHA REQUIREMENTS BETWEEN THE STEEL DETAILER AND JOIST MANUFACTURER. SEE ADDITIONAL INFORMATION IN THE STRUCTURAL STEEL "DETAILING, FABRICATION, AND ERECTION" SECTION.

THE ENGINEER OF RECORD FOR THE METAL JOIST DESIGN SHALL HAVE A MINIMUM OF (5) YEARS EXPERIENCE IN THE DESIGN OF METAL JOISTS OF SIMILAR SIZE PROJECTS AND BE LICENSED AS A PROFESSIONAL ENGINEER IN THE STATE OF PROJECT. THE ENGINEER OF RECORD FOR THE JOIST DESIGN SHALL SUBMIT A STAMPED LETTER OF COMPLIANCE INDICATING YEARS OF EXPERIENCE. THE LETTER SHALL ALSO STATE THAT THEY HAVE REVIEWED THE JOIST PLACEMENT DRAWINGS AND BILLS OF MATERIAL FOR COMPLIANCE WITH THE CONTRACT DOCUMENTS, ALONG WITH VERIFICATION THAT THE JOISTS CONFORM TO THE DESIGN CRITERIA AND ADDITIONAL LOADING REQUIREMENTS LISTED IN THE CONTRACT DOCUMENTS (INCLUDING BUT NOT LIMITED TO SNOW DRIFT, WIND UPLIFT, JOIST AXIAL LOADS AND MECHANICAL UNIT LOADING).

COMPOSITE FLOOR DECK: SHALL CONTAIN THE MINIMUM PROPERTIES SHOWN ON THE STRUCTURAL DRAWINGS AND SHALL BE "FORMLOCK" AS MANUFACTURED BY VERCO MANUFACTURING CO., "W COMPOSITE" AS MANUFACTURED BY ASC STEEL DECK, "EPICORE" AS MANUFACTURED BY EPIC METALS, OR PRE-APPROVED EQUAL. THE FLOOR UNITS SHALL BE FORMED FROM STEEL SHEETS CONFORMING TO ASTM A653, AND GALVANIZED PER ASTM A924. SUBMIT SHOP DRAWINGS SHOWING LAYOUT AND FASTENING PATTERN. ALL ACCESSORIES INCLUDING EDGE FORMS, CLOSURE, ETC. SHALL BE PROVIDED TO COMPLETE THE INSTALLATION OF THE COMPOSITE FLOOR.

METAL ROOF DECK: SHALL CONTAIN THE MINIMUM PROPERTIES SHOWN ON THE STRUCTURAL DRAWINGS AND SHALL BE MANUFACTURED BY VERCO MANUFACTURING CO., ASC STEEL DECK, EPIC METALS, OR PRE-APPROVED EQUAL. THE ROOF DECK SHALL BE FORMED FROM STEEL SHEETS CONFORMING TO ASTM A611 OR A653, AND SHALL BE GALVANIZED PER ASTM A924. THE ROOF DECK SHALL BE PLACED ON THE SUPPORTING FRAMEWORK WITH A MINIMUM END LAP OF TWO INCHES. SUBMIT SHOP DRAWINGS SHOWING LAYOUT AND FASTENING PATTERN. ALL ACCESSORIES SHALL BE PROVIDED TO COMPLETE THE ERECTION OF THE STEEL DECK.

PREFABRICATED METAL STAIRS AND LANDINGS: SHALL BE DESIGNED PER AISC AND IBC REQUIREMENTS. STRINGERS AND LANDINGS SHALL BE DESIGNED FOR A MINIMUM OF 100 PSF LIVE LOAD. INDIVIDUAL TREADS SHALL BE DESIGNED FOR 300 POUND CONCENTRATED LOAD. THE STAIR DESIGN CALCULATIONS AND SHOP DRAWINGS SHALL BE SUBMITTED TO THE STRUCTURAL ENGINEER SHOWING THE COMPLETE ASSEMBLY AND ATTACHMENTS TO THE SURROUNDING STRUCTURE. THE ATTACHMENTS SHALL BE DETAILED SUCH THAT NO TORQUE IS APPLIED TO THE SURROUNDING STRUCTURAL MEMBERS. THE CALCULATIONS AND SHOP DRAWINGS SHALL BEAR THE SEAL AND SIGNATURE OF A REGISTERED STRUCTURAL ENGINEER LICENSED IN THE STATE OF PROJECT.

BAR GRATING: SHALL BE RYERSON "RY-WELD" STEEL GRATING OR PRE-APPROVED EQUAL AND DESIGNED TO OSHA STANDARDS. GRATING SHALL BE DESIGNED TO CARRY THE LOADS LISTED IN THE DESIGN CRITERION AND ANY ADDITIONAL LOADS INDICATED ON THE FRAMING PLAN. PROVIDE SHOP AND INSTALLATION DRAWINGS PRODUCED UNDER THE SUPERVISION OF AND BEARING THE SEAL AND SIGNATURE OF A STRUCTURAL ENGINEER REGISTERED IN THE STATE OF PROJECT. DETAIL DRAWINGS TO INDICATE TYPES, SIZE, SPACING, CONNECTIONS, ANCHORING AND OTHER PERTINENT DETAILS.

COLD-FORMED STEEL FRAMING CONSTRUCTION:

THE DESIGN, INSTALLATION AND CONSTRUCTION OF COLD-FORMED CARBON OR LOW-ALLOY STEEL, STRUCTURAL AND NON-STRUCTURAL STEEL FRAMING, SHALL BE IN ACCORDANCE WITH IBC SECTION 2211 AND AMERICAN IRON AND STEEL INSTITUTE (AISI) STANDARD S100-07/S1-10 AND S200-07 AND SHALL BE mANUFACTURED BY A MEMBER OF THE STEEL STUD MANUFACTURER'S ASSOCIATION (SSMA), OR PRE-APPROVED EQUAL, IN ACCORDANCE WITH SSMA ICC ER-4943P ANS S200-07. ALL 54 MIL AND HEAVIER GALVANIZED MEMBERS SHALL BE FORMED FROM STEEL THAT MEETS THE REQUIREMENTS OF ASTM A653, QUALITY SQ, GRADE 50, CLASS 1, FY=50 KSI. ALL 43 MIL AND LIGHTER GALVANIZED MEMBERS SHALL BE FORMED FROM STEEL THAT MEETS THE REQUIREMENTS OF ASTM A653, QUALITY SQ, GRADE 33, FY=33 KSI. BRIDGING PER MANUFACTURER'S REQUIREMENTS AND AS SHOWN IN THE STRUCTURAL DRAWINGS SHALL BE IN PLACE PRIOR TO PLACING OF ANY CONSTRUCTION LOADS. ALL RUNS SHALL BE RIGIDLY ANCHORED TO END WALLS.

EXTERIOR WALL AND BEARING WALL COLD-FORMED STEEL FRAMING: COLD-FORMED STEEL FRAMING MEMBERS SHALL MEET THE TYPE, SIZE AND THICKNESS AS INDICATED ON THE STRUCTURAL PLANS AND SPECIFICATIONS.

INTERIOR NON-BEARING WALL, CEILING, SOFFIT, AND OTHER MISC. COLD-FORMED STEEL FRAMING: COLD-FORMED STEEL FRAMING MEMBERS SHALL MEET THE TYPE, SIZE, AND THICKNESS AS INDICATED IN THE ARCHITECTURAL DRAWINGS AND SPECIFICATIONS, AND SHALL CONFORM TO THE MINIMUM PERSCRIPTIVE REQUIREMENTS OF THE GYPSUM CONSTRUCTION HANDBOOK BY CGC, INC. FRAMING CONDITIONS THAT EXCEED THE WEIGHT, SPAN OR HEIGHT LIMITATIONS SHALL BE CONSTRUCTED USING APPLICABLE DETAILS ON THE STRUCTURAL DRAWINGS. THE CONTRACTOR SHALL BE RESPONSIBLE FOR THE DESIGN, DETAILING, FABRICATION AND ERECTION OF ALL COLD-FORMED FRAMING NOT SPECIFICALLY DETAILED IN THE GYPSUM CONSTRUCTION HANDBOOK OR ON THE STRUCTURAL DRAWINGS. THE DESIGN AND DETAILING OF THE COLD-FORMED STEEL FRAMING AND CONNECTION TO THE STRUCTURE SHALL BE PREPARED UNDER THE DIRECTION OF AND STAMPED BY A PROFESSIONAL ENGINEER LICENSED IN THE STATE OF PROJECT AND SHALL BE SUBMITTED TO THE ENGINEER OF RECORD FOR APPROVAL PRIOR TO CONSTRUCTION.

COLD-FORMED STEEL FRAMING SUBSTITUTION: AT THE CONTRACTOR'S OPTION, THE CONTRACTOR SHALL BE RESPONSIBLE FOR THE DESIGN, DETAILING, FABRICATION AND ERECTION OF THE INTERIOR NON-BEARING COLD-FORMED STEEL FRAMING NOT OCCURING AT BRICK VENEER AND THE CONNECTION OF THE COLD-FORMED STEEL FRAMING TO THE STRUCTURE. THE DESIGN AND DETAILING OF THE COLD-FORMED STEEL FRAMING AND CONNECTION TO THE STRUCTURE SHALL BE PREPARED UNDER THE DIRECTION OF AND STAMPED BY A <STRUCTURAL/PROFESSIONAL> ENGINEER LICENSED IN THE STATE OF PROJECT AND SHALL BE SUBMITTED TO THE ENGINEER OF RECORD FOR APPROVAL PRIOR TO CONSTRUCTION.

POWDER ACTUATED FASTENERS: SHALL BE X-U UNIVERSAL KNURLED SHANK FASTENER BY HILTI OR PRE-APPROVED EQUAL. INSTALL PER ALL MANUFACTURER'S PUBLISHED RECOMMENDATIONS. COLD-FORMED STEEL TO STRUCTURAL STEEL: UNLESS NOTED OTHERWISE, PROVIDE 0.157" SHANK DIAMETER X-U LOW-VELOCITY FASTENER - FASTENER TIP SHALL PENETRATE STRUCTURAL STEEL. COLD-FORMED STEEL TO CONCRETE: UNLESS NOTED OTHERWISE, PROVIDE 0.157" SHANK DIAMETER X-U LOW-VELOCITY FASTENER - EMBED 1-1/2" MINIMUM INTO CONCRETE, UNLESS NOTED OTHERWISE.

SLIP CONNECTIONS: THE STEEL NETWORK "VERTICLIP" OR PRE-APPROVED EQUAL. MATCH CLIP WITH STUD SIZE AND THICKNESS. ATTACH PER MANUFACTURER'S REQUIREMENTS.

MISCELLANEOUS:

PRE-APPROVED SUBSTITUTIONS: SUBSTITUTIONS MAY BE ALLOWED ONLY IF THEY MEET THE REQUIREMENTS OF THESE GENERAL NOTES AND THE SPECIFICATIONS, AND IF COMPLETE WRITTEN ENGINEERING DATA FOR EACH CONDITION REQUIRED FOR THIS PROJECT IS PROVIDED TO THE STRUCTURAL ENGINEER TWO WEEKS PRIOR TO BID DATE AND APPROVED IN WRITTEN ADDENDA BY THE ARCHITECT. DATA IS TO INDICATE CODE BASIS BY YEAR, AUTHORITY FOR STRESSES AND STRESS INCREASES, IF ANY, AND AMOUNT OF EXPECTED DEFLECTION FOR FLEXURAL MEMBERS UNDER (1) TOTAL LOAD AND (2) LIVE LOAD ONLY. ALL INCREASED COSTS IN MECHANICAL, SPRINKLER, ELECTRICAL OR GENERAL INSTALLATION AND ANY ARCHITECTURAL OR STRUCTURAL REDESIGN RESULTING FROM SUBSTITUTION SHALL BE BORNE BY THE GENERAL CONTRACTOR.

SHOP

THE FOLLOWING SHOP DRAWINGS/SUBMITTALS SHALL BE PROVIDED FOR REVIEW AND APPROVAL BY THE STRUCTURAL ENGINEER PRIOR TO FABRICATION OR DELIVERY.

		STRUCTURAL	BLDG.
1.	CONCRETE MIX DESIGNS	X	X
2.	REINFORCING STEEL SHOP DRAWINGS	X	
3.	STRUCTURAL STEEL	X	X
4.	METAL JOISTS	X	X
5.	METAL DECK	X	X
6.	COLD-FORMED STEEL FRAMING	X	X
7.	PREFABRICATED METAL STAIRS AND LANDINGS	X	X
8.	MISCELLANEOUS STEEL	X	X
9.	VENEER ANCHORAGE SYSTEM	X	X
10.	CONTRACTOR'S STATEMENT OF RESPONSIBILITY	X	X

DEFERRED SUBMITTALS
THE FOLLOWING ARE NOT INCLUDED WITH THE BUILDING PERMIT DRAWINGS AND SHALL BE SUBMITTED TO THE BUILDING DEPARTMENT AND THE STRUCTURAL ENGINEER FOR REVIEW AND APPROVAL AS A DEFERRED SUBMITTAL. SUBMITTALS SHALL BEAR THE SEAL OF AN ENGINEER LICENSED IN THE STATE OF THE PROJECT AS NOTED.

		ENGINEER STAMP REQUIRED
1.	COLD-FORMED STEEL FRAMING	SE
2.	PREFABRICATED METAL STAIRS AND LANDINGS	SE
3.	CURTAIN WALL	SE
4.	FALL RESTRAINTS	SE
5.	STORAGE RACKS	SE (OVER 8'-0")

REVISIONS

CONFORMED SET

WESTERN STATE HOSPITAL
BUILDING 22, PATIENT SUPPORT CENTER
PATIENT SUPPORT CENTER
9601 STEILACOOM BLVD SW, LAKEWOOD, WASHINGTON 98498-7213

PCS Structural Solutions
Seattle | Tacoma | Portland
www.pcs-structural.com

NAC ARCHITECTURE
nacarchitecture.com
2025 FIRST AVE | SUITE 300
SEATTLE WA 98121
P:206.441.4522

© 2018 NAC Inc

DSHS NO	16-410G (2-1)
NAC NO	121-16004
DRAWN	DMY
CHECKED	BLC
DATE	03/16/2018

GENERAL NOTES

S1.02

3/16/2018 1:32:00 PM C:_Revit Models\16361 WSH Kitchen Commisary R2

STATEMENT OF SPECIAL INSPECTIONS:

SPECIAL INSPECTION: SPECIAL INSPECTION SHALL BE PROVIDED PER THE REQUIREMENTS OF IBC SECTION 1704 AND 1705 AND AS NOTED HEREIN.

STRUCTURAL SYSTEM	VERIFICATION AND INSPECTION	CONTINUOUS	PERIODIC	COMMENT	REFERENCE
SOIL	VERIFY MATERIALS BELOW SHALLOW FOUNDATIONS ARE ADEQUATE TO ACHIEVE THE DESIGN BEARING CAPACITY		X		IBC
	VERIFY EXCAVATIONS ARE EXTENDED TO PROPER DEPTH AND HAVE REACHED PROPER MATERIAL		X		
	PERFORM CLASSIFICATION AND TESTING OF COMPACTED FILL MATERIALS		X		
	VERIFY USE OF PROPER MATERIALS, DENSITIES AND LIFT THICKNESSES DURING PLACEMENT AND COMPACTION OF COMPACTED FILL	X			
	PRIOR TO PLACEMENT OF COMPACTED FILL, INSPECT SUBGRADE AND VERIFY THAT SITE HAS BEEN PREPARED PROPERLY		X		
STEEL CONSTRUCTION	MATERIAL VERIFICATION OF HIGH-STRENGTH BOLTS, NUTS AND WASHERS		X		AISC 360 CHAPTER
	HIGH-STRENGTH BOLTING A. SNUG-TIGHT JOINTS B. PRETENSIONED AND SLIP-CRITICAL JOINTS USING TURN-OF-NUT WITH MATCHMARKING,		 X X		AISC 360 CHAPTER N5 AISC 341 CHAPTER J7
	MATERIAL VERIFICATION OF STRUCTURAL STEEL A. FOR STRUCTURAL STEEL, IDENTIFICATION MARKINGS TO CONFORM TO AISC 360 B. MANUFACTURER'S CERTIFIED MILL TEST REPORTS		 X X	MANUFACTURER TO PROVIDE CERTIFIED MILL TEST REPORTS	AISC 360 CHAPTER N5 AISC 341 CHAPTER J6
	MATERIAL VERIFICATION OF WELD FILLER MATERIALS A. IDENTIFICATION MARKINGS TO CONFORM TO AWS SPECIFICATIONS LISTED IN GENERAL NOTES B. MANUFACTURER'S CERTIFICATE OF COMPLIANCE		 X X	MANUFACTURER TO PROVIDE CERTIFICATE OF COMPLIANCE	AISC 360 CHAPTER N5
	INSPECTION OF WELDING A. COMPLETE AND PARTIAL JOINT PENETRATION GROOVE WELDS B. MULTI-PASS FILLET WELDS C. SINGLE-PASS FILLET WELDS > 5/16" D. PLUG AND SLOT WELDS E. SINGLE-PASS FILLET WELDS ≤ 5/16" F. FIELD-INSTALLED WELDED STUDS G. WELDING OF STAIRS AND RAILING SYSTEMS	 X X X	 X X X	SPECIAL INSPECTIONS IN THIS SECTION ARE WAIVED WHERE FABRICATION IS PERFORMED ON THE PREMISES OF A FABRICATOR REGISTERED AND APPROVED IN ACCORDANCE WITH IBC SECTION 1704.2.5	AISC 360 CHAPTER N5 AISC 341 CHAPTER J6 AWS D1.1
	INSPECTION OF STEEL FRAME JOINT DETAILS FOR COMPLIANCE WITH APPROVED CONSTRUCTION DOCUMENTS		X		
STEEL CONSTRUCTION OTHER THAN STRUCTURAL STEEL	MATERIAL VERIFICATION OF COLD-FORMED STEEL DECK: A. IDENTIFICATION MARKINGS TO CONFORM TO ASTM STANDARDS SPECIFIED IN THE APPROVED CONSTRUCTION DOCUMENTS B. MANUFACTURER'S CERTIFIED TEST REPORTS		 X X		APPLICABLE ASTM MATERIAL STANDARDS
	INSPECTION OF WELDING A. COLD-FORM STEEL DECK WELDS B. REINFORCING STEEL: 1. VERIFICATION OF WELDABILITY OF REINFORCING STEEL OTHER THAN ASTM A 706 2. OTHER REINFORCING STEEL 3. OPEN WEB STEEL JOISTS & JOIST GIRDERS A. END CONNECTIONS - WELDING OR BOLTED B. BRIDGING - HORIZONTAL OR DIAGONAL 1. STANDARD BRIDGING 2. BRIDGING THAT DIFFERS FROM THE SJI SPECIFICATIONS LISTED IN SECTION 2207.1		 X X X X X X		AWS D1.3 AWS D1.4 ACI 318 SECTION 26.6.4 IBC 1705.2.3 SJI SPECIFICATIONS LISTED IN SECTION 2207.1 SJI SPECIFICATIONS LISTED IN SECTION 2207.1
CONCRETE	INSPECT REINFORCEMENT, INCLUDING PRE-STRESSING TENDONS, AND VERIFY PLACEMENT		X	SPECIAL INSPECTIONS NOT REQUIRED FOR THE FOLLOWING CONDITIONS: NON-STRUCTURAL SLAB ON GRADE CONCRETE FOUNDATION WALLS WITH F'c ≤ 2500 PSI ISOLATED SPREAD FOOTINGS FOR BUILDINGS THREE-STORIES AND LESS ABOVE GRADE PLANE CONTINUOUS FOOTINGS SUPPORTING WALLS OF THREE-STORIES AND LESS ABOVE GRADE PLANE WHERE WALLS ARE LIGHT-FRAME CONSTRUCTION AND STRUCTURAL DESIGN IS BASED ON F'c ≤ 2500 PSI PERIODIC INSPECTION TO INCLUDE A QUANTITY OF 10% WITH A MINIMUM OF (5) ANCHORS INSPECTED PER INSTALLER ON A DAILY BASIS.	ACI 318: CH 20, 25.2, 25.3, 26.6-1 TO 26.6-3, IBC 1908.4
	ANCHORS CAST IN CONCRETE-PRIOR TO AND DURING PLACEMENT OF CONCRETE		X		ACI 318: 17.8.2 AISC 360 SECTION N7
	VERIFY USE OF REQUIRED DESIGN MIX		X		ACI 318, CH 19
	PRIOR TO CONCRETE PLACEMENT, FABRICATE SPECIMENS FOR STRENGTH TESTS, PERFORM SLUMP AND AIR CONTENT TESTS, AND DETERMINE THE TEMPERATURE OF THE CONCRETE	X			ASTM C172, C31 ACI 318: 26.4, 26.12 IBC 1908.10
	CONCRETE AND SHOTCRETE PLACEMENT FOR PROPER APPLICATION	X			ACI 318: 26.5 IBC 1908.6, 1908.7, 1908.8
	MAINTENANCE OF SPECIFIED CURING TEMPERATURE AND TECHNIQUES		X		ACI 318: 26.5.3 TO 26.5.5 IBC 1908.9
	ANCHORS POST-INSTALLED IN HARDENED CONCRETE (MECHANICAL ANCHORS AND ADHESIVE ANCHORS INSTALLED DOWNWARD)		X		ACI 318: 17.8.2 MFR EVAL REPORT MFR PUBLISHED INSTALLATION INSTRUCTIONS
	ANCHORS POST-INSTALLED IN HARDENED CONCRETE (MECHANICAL & ADHESIVE ANCHORS INSTALLED HORIZONTAL OR UPWARDLY INCLINED)	X			ACI 318: 17.8.2 MFR EVAL REPORT MFR PUBLISHED INSTALLATION INSTRUCTIONS
CONCRETE (CONT.)	ERECTION OF PRECAST CONCRETE		X		ACI 318: 26.8
	VERIFICATION OF IN-SITU CONCRETE STRENGTH PRIOR TO REMOVAL OF SHORES AND FORMS FROM BEAMS AND STRUCTURAL SLABS		X		ACI 318: 26.11.2
	INSPECT FORMWORK FOR SHAPE, LOCATION AND DIMENSIONS OF THE CONCRETE MEMBER BEING FORMED		X		ACI 318: 26.11.1.2(b)
	MATERIAL VERIFICATION OF REINFORCEMENT STEEL FOR ASTM A615 REINFORCING		X	MANUFACTURER SHALL PROVIDE MILL TEST REPORTS. CONTINUOUS INSPECTION FOR ALL WELDS GREATER THAN 5/16" FILLET. PERIODIC INSPECTION FOR FILLET WELD 5/16" AND SMALLER	ACI 318: 26.6.4 AWS D1.4 IBC 1705.3.1
	TESTING OF MATERIALS		X		IBC 1705.3.2
COLD-FORMED STEEL FRAMING	SCREW ATTACHMENT, WELDING, BOLTING, ANCHORING AND FASTENING OF ELEMENTS OF SEISMIC RESISTING SYSTEM INCLUDING SHEAR WALLS, BRACES, DIAPHRAGMS, COLLECTORS (DRAG STRUTS) AND HOLDOWNS		X	NOT REQUIRED WHERE SHEATHING IS GYPSUM BOARD OR FIBERBOARD OR WHEN THE SHEATHING IS WOOD STRUCTURAL PANEL OR STEEL SHEETS ON (1) SIDE AND WITH SCREWS SPACED GREATER THAN 4" O.C.	IBC 1705.12.3, 1705.11.3 AWS D1.3
	EXTERIOR WALLS		X		IBC 1705.10.3, 1705.11.5
SUSPENDED CEILINGS	ANCHORAGE AND SEISMIC BRACING		X		ASCE 7-10, APPENDIX 11A
STORAGE RACKS	ANCHORAGE OF RACKS TO STRUCTURE		X	SPECIAL INSPECTION NOT REQUIRED FOR STORAGE RACKS < 8 FT. HIGH	IBC 1705.12.7
ANCHORED VENEER	INSPECTION PROGRAM SHALL VERIFY: 1. SIZE, TYPE OF VENEER ANCHORS 2. SIZE, GRADE OF JOINT REINF. 3. PROPORTIONS OF MORTAR 4. CONSTRUCTION OF MORTAR JOINTS 5. INSTALLATION OF TIES		 X X X X X	VERIFICATION AT BEGINNING OF CONSTRUCTION	IBC 1705.12.5, 1705.4 TMS 402 / ACI 530 / ASCE 5

TESTING AND SPECIAL INSPECTION REPORTS SHALL BE PREPARED FOR EACH INSPECTION ITEM ON A DAILY BASIS WHENEVER WORK IS PERFORMED ON THAT ITEM. REPORTS SHALL BE DISTRIBUTED TO OWNER, CONTRACTOR, BUILDING OFFICIAL, ARCHITECT AND STRUCTURAL ENGINEER OF RECORD.

STRUCTURAL OBSERVATIONS SHALL BE PERFORMED BY THE STRUCTURAL ENGINEER OF RECORD OR DESIGNATED REPRESENTATIVE IN ACCORDANCE WITH IBC 1704.6. STRUCTURAL OBSERVATION SHALL BE PERFORMED AS FOLLOWS:

- PERIODIC VISUAL OBSERVATION OF STRUCTURAL SYSTEMS FOR GENERAL CONFORMANCE TO CONSTRUCTION DOCUMENTS AT SIGNIFICANT CONSTRUCTION STAGES.
- REVIEW OF TESTING AND INSPECTION REPORTS.
- REPORTS SHALL BE PREPARED FOR EACH SITE VISIT AND SHALL BE DISTRIBUTED TO ARCHITECT.

GENERAL CONTRACTOR SHALL SUBMIT A WRITTEN CONTRACTOR'S STATEMENT OF RESPONSIBILITY TO THE BUILDING OFFICIAL AND OWNER PRIOR TO COMMENCEMENT OF WORK. THE CONTRACTOR'S STATEMENT OF RESPONSIBILITY SHALL INCLUDE ACKNOWLEDGMENT OF AWARENESS OF THE SPECIAL INSPECTION REQUIREMENTS CONTAINED IN THE STATEMENT OF SPECIAL INSPECTION.

ABBREVIATION LIST			
@	AT	HGR	HANGER
A.B.	ANCHOR	HORIZ.	HORIZONTAL
ADD'L	ADDITIONAL	HSS	HOLLOW STRUCTURAL SECTION
A.F.F.	ABOVE FINISH	HT	HEIGHT
ALT.	ALTERNATE	INT.	INTERIOR
ARCH.	ARCHITECTURAL	JST	JOIST
BLD'G	BUILDING	JT	JOINT
BLK'G	BLOCKING	L	ANGLE
BM	BEAM	L.L.	LIVE LOAD
B.O.F.	BOTTOM OF FOOTING	LLH	LONG LEG HORIZONTAL
BOT.	BOTTOM	LLV	LONG LEG VERTICAL
BRG	BEARING	LOC.	LOCATION
BTWN	BETWEEN	LSL	LAMINATED STRAND LUMBER
B.U.	BUILT UP	LVL	LAMINATED VENEER LUMBER
(C=)	CAMBER	MAX.	MAXIMUM
CANT.	CANTILEVER	M.B.	MACHINE BOLT
C.F.S.	COLD-FORMED STEEL	MECH.	MECHANICAL
C.J.	CONTROL/CONSTRUCTION JOINT	MEZZ.	MEZZANINE
℄	CENTERLINE	MFR	MANUFACTURER
CLR.	CLEARANCE	MIN.	MINIMUM
CMU	CONCRETE MASONRY UNIT	MISC.	MISCELLANEOUS
COL.	COLUMN	MTL	METAL
CONC.	CONCRETE	N.F.	NEAR FACE
CONN.	CONNECTION	N.S.	NEAR SIDE
CONST.	CONSTRUCTION	NTS	NOT TO SCALE
CONT.	CONTINUOUS	O.C.	ON CENTER
CONTR.	CONTRACTOR	OPN'G	OPENING
COORD.	COORDINATE	OPP.	OPPOSITE
C.P.	COMPLETE PENETRATION	P.A.F.	POWDER ACTUATED FASTENER
CTR'D	CENTERED	PERP.	PERPENDICULAR
C.Y.	CUBIC YARD	ℙ	PLATE
DBL.	DOUBLE	P.P.	PARTIAL PENETRATION
D.F.	DOUGLAS FIR	P.P.T.	PRESERVATIVE PRESSURE TREATED
DIA. OR ℗	DIAMETER	P.S.F.	POUNDS PER SQUARE FOOT
DIAG.	DIAGONAL	PSL	PARALLAM
DIM.	DIMENSION	P.T.	POST TENSION
D.L.	DEAD LOAD	PW.	PLYWOOD
DWG	DRAWING	REINF.	REINFORCING
DWL	DOWEL	REQ'D	REQUIRED
(E)	EXISTING	SCHED.	SCHEDULE
EA.	EACH	S.C.L.SHT'G	STRUCTURAL COMPOSITE LUMBER
E.F.	EACH FACE	SHT'G	SHEATHING
EL.	ELEVATION	SIM.	SIMILAR
ELEV.	ELEVATOR	S.O.G.	SLAB ON GRADE
ENGR.	ENGINEER	SQ.	SQUARE
EQ.	EQUAL	STD	STANDARD
E.W.	EACH	STIFF.	STIFFENER
EXP.	EXPANSION	STL	STEEL
EXT.	EXTERIOR	STRUCT.	STRUCTURAL
FDN	FOUNDATION	T&B	TOP & BOTTOM
F.F.	FAR FACE	T&G	TONGUE AND GROOVE
FLR	FLOOR	THR'D	THREADED
F.O.M.	FACE OF MASONRY	T.O.F.	TOP OF FOOTING
F.O.S.	FACE OF STUD	T.O.S.	TOP OF STEEL
FRM'G	FRAMING	TRT'D	TREATED
F.R.T.	FIRE RETARDANT TREATED	TYP.	TYPICAL
F.S.	FAR SIDE	U.N.O.	UNLESS NOTED OTHERWISE
FTG	FOOTING	U.T.	ULTRASONIC TESTED
GA.	GAGE/GAUGE	VERT.	VERTICAL
GALV.	GALVANIZED	W/	WITH
GL.	GLULAM	W.P.	WORK POINT
GR.	GRADE	WT	WEIGHT
GWB	GYPSUM WALL BOARD	W.W.R.	WELDED WIRE REINFORCING
HDR	HEADER		

REVISIONS

CONFORMED SET

WESTERN STATE HOSPITAL
BUILDING 22, PATIENT SUPPORT CENTER
PATIENT SUPPORT CENTER
9601 STEILACOOM BLVD SW, LAKEWOOD, WASHINGTON 98498-7213

PCS Structural Solutions
Seattle | Tacoma | Portland
www.pcs-structural.com

NAC ARCHITECTURE
nacarchitecture.com
2025 FIRST AVE | SUITE 300
SEATTLE WA 98121
P.206.441.4522

© 2018 NAC INC

DSHS NO	16-410G (2-1)
NAC NO	121-16004
DRAWN	DMY
CHECKED	BLC
DATE	03/16/2018

GENERAL NOTES

S1.03

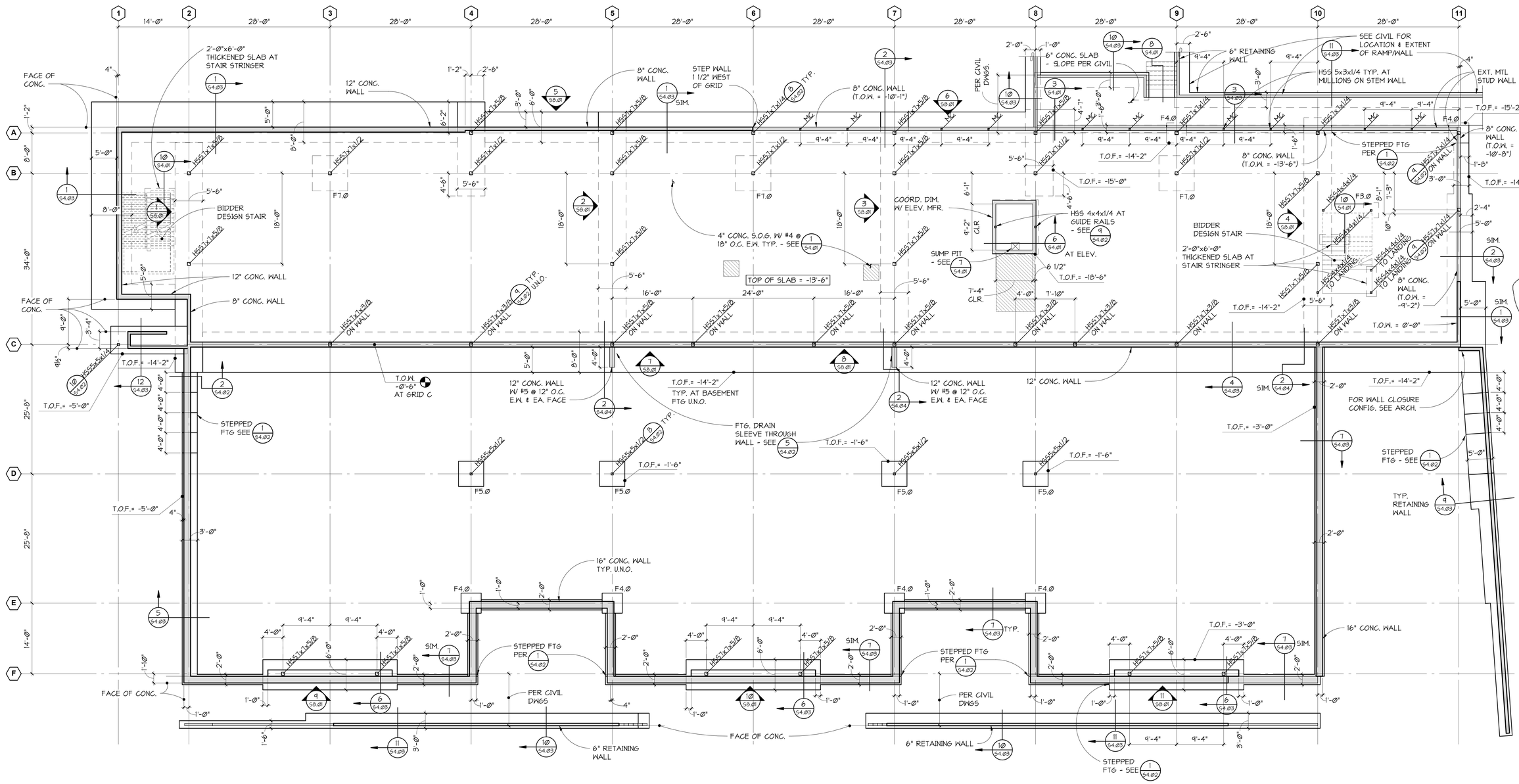

FOUNDATION PLAN

NORTH

1 / S3.11 — 1/8" = 1'-Ø"

FOUNDATION NOTES:

1. COORDINATE ALL DIMENSIONS WITH ARCHITECTURAL DRAWINGS.
2. REFERENCE ELEVATION 240.ØØ = Ø'-ØØ".
3. TOP OF FOOTING ELEVATIONS = -5'-Ø" UNLESS NOTED OTHERWISE ON PLANS. FOR RETAINING AND SITE WALL FOOTING ELEVATION SEE APPLICABLE DETAILS AND CIVIL GRADING PLAN
4. INDICATES CONCRETE STEM WALL. FOR TOP OF WALL REQUIREMENTS AND CALLOUTS - SEE GRADE LEVEL FRAMING PLANS.
5. INDICATES CONTINUOUS CONCRETE WALL FOOTING. FOR TYPICAL FOOTING AND STEM WALL DETAILS - SEE SHEETS S4.Ø1, S4.Ø2, AND S4.Ø3. FOOTING WIDTH ("W") = 2'-Ø" UNLESS NOTED OTHERWISE ON PLAN. CENTER FOOTINGS ON CONCRETE STEM WALL. EXTEND FOOTINGS 6" MINIMUM PAST ENDS OF WALL UNLESS NOTED OTHERWISE.
6. "F_" INDICATES CONCRETE SPREAD FOOTING. FOR SCHEDULE - SEE 7/S4.Ø2.
7. HSS5x5x3/8 INDICATES STEEL COLUMNS ORIGINATING AT FOUNDATION LEVEL. ALL COLUMNS ARE CONTINUOUS TO ROOF UNLESS NOTED OTHERWISE. FOR TYPICAL ANCHOR ROD/BOLT DETAIL - SEE 9/S5.Ø1.
8. FOR TYPICAL FOUNDATION DETAILS - SEE SHEETS S4.Ø1 AND S4.Ø2.
9. FOR TYPICAL PLACEMENT OF STEM WALL REINFORCEMENT, STEPS IN FOOTING, AND FOUNDATION CONSTRUCTION JOINTS - SEE DETAILS 4/S4.Ø2, 1/S4.Ø2, AND 6/S4.Ø2.
10. SEE GRADE LEVEL FRAMING NOTES FOR EXTERIOR METAL STUD WALL REQUIREMENTS.
11. INDICATES HSS 5x3x1/4 WALL COLUMN ALIGNED W/ WINDOW MULLIONS - FOR TYP. BASE CONNECTION SEE 9/S4.Ø2.
12. 6 / S8.Ø1 INDICATES BRACED FRAME. FOR ELEVATIONS, BRACE SIZES AND DETAIL CALLOUTS - SEE SHEET S8.Ø1.

REVISIONS

CONFORMED SET

WESTERN STATE HOSPITAL
BUILDING 22, PATIENT SUPPORT CENTER
PATIENT SUPPORT CENTER
9601 STEILACOOM BLVD SW, LAKEWOOD, WASHINGTON 98498-7213

PCS Structural Solutions
Seattle | Tacoma | Portland
www.pcs-structural.com

NAC ARCHITECTURE
nacarchitecture.com
2025 FIRST AVE | SUITE 300
SEATTLE WA 98121
P:206.441.4522

© 2018 NAC Inc

DSHS NO	16-410G (2-1)
NAC NO	121-16004
DRAWN	DMY
CHECKED	BLC
DATE	03/16/2018

FOUNDATION PLAN

S3.11

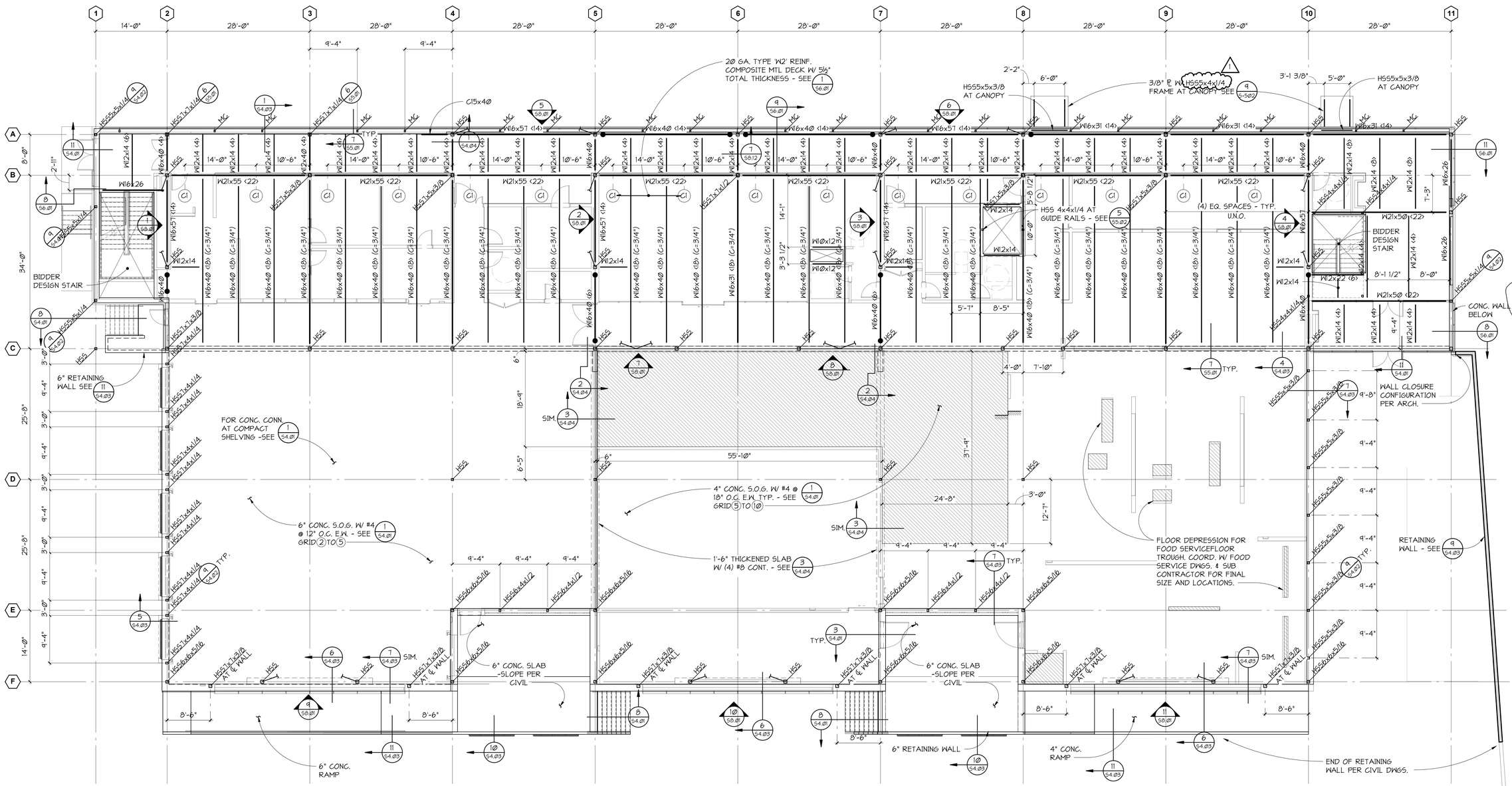

FOR FLOOR FRAMING NOTES - SEE S3.13

GRADE LEVEL FRAMING PLAN

NORTH — 1/S3.12 — 1/8" = 1'-0"

GRADE LEVEL FRAMING NOTES:

1. COORDINATE ALL DIMENSIONS WITH ARCHITECTURAL DRAWINGS.
2. TOP OF SLAB = Ø'-Ø" ABOVE FINISH FLOOR UNLESS NOTED OTHERWISE.
3. INDICATES 800S162-54 AT 16" ON CENTER EXTERIOR METAL STUD WALL UNLESS NOTED OTHERWISE IN PLANS OR DETAILS. FOR SCHEDULE - SEE 2/S9.Ø1. FOR TYPICAL METAL STUD WALL DETAILS SEE SHEETS S9.Ø1, S9.Ø2, AND S9.Ø3.
4. INDICATES BRACED FRAME. FOR ELEVATIONS, BRACE SIZES AND DETAIL CALLOUTS - SEE SHEET S8.Ø1.
5. INDICATES STEEL COLUMNS ORIGINATING AT GRADE LEVEL UNLESS SHOWN ON FOUNDATION PLAN. ALL COLUMNS ARE CONTINUOUS TO ROOF UNLESS NOTED OTHERWISE.
6. INDICATES TYPE OF CONTINUOUS COLUMN FROM LEVEL BELOW AND CONTINUING ON TO LEVEL ABOVE.
7. INDICATES MECHANICAL UNIT AND MAXIMUM WEIGHT. SEE MECHANICAL FOR HOUSEKEEPING PADS.
8. INDICATES SLOPED AND/OR DEPRESSED SLAB-ON-GRADE. AT FREEZER, RESTROOMS, DRAINS, WALK OFF MATS, FLOOR FINISH ETC. SEE ARCHITECTURAL FOR ADDITIONAL REQUIREMENTS. FOR TYPICAL REINFORCING - SEE SHEET S4.Ø1.
9. FOR TYPICAL CONCRETE SLAB-ON-GRADE DETAILS - SEE SHEET S4.Ø1.
10. INDICATES INTERIOR NON-STRUCTURAL STUD WALLS. ALL WALLS ARE NOT SHOWN. FOR LOCATION SEE ARCHITECTURAL FOR BRACING AT TOPS OF WALLS - SEE SHEET S9.Ø3. FOR SCHEDULE AND TYPICAL FRAMING - SEE SHEETS S9.Ø1, S9.Ø2, AND S9.Ø3.
11. FOR SITE STRUCTURES INCLUDING CANOPIES, WALKWAYS, SITE SIGNS, ETC. - SEE ARCHITECTURAL & CIVIL.
12. FOR TRENCHES IN SLAB ON GRADE - SEE ARCHITECTURAL/MECHANICAL.
13. FOR TYPICAL RETAINING WALL SCHEDULE - SEE 9/S4.Ø3 AND 10/S4.Ø3.
14. FOR TYPICAL SELF-SUPPORTING VENEER LINTEL ANGLE ABOVE OPENINGS - SEE 6/S5.Ø2 .
15. INDICATES HSS 5x3x1/4 WALL COLUMN ALIGNED W/ WINDOW MULLIONS - FOR TYPICAL DETAILS SEE 9/S4.Ø2 & 9/S6.Ø1.
16. FOR ALL EXPOSED STEEL LOCATIONS AND REQUIRED FINISHES SEE ARCHITECTURAL DRAWINGS AND SPECIFICATIONS.

REVISIONS
1 ADDENDUM 1 01/26/18

CONFORMED SET

WESTERN STATE HOSPITAL
BUILDING 22, PATIENT SUPPORT CENTER
PATIENT SUPPORT CENTER
9601 STEILACOOM BLVD SW, LAKEWOOD, WASHINGTON 98498-7213

PCS Structural Solutions
Seattle | Tacoma | Portland
www.pcs-structural.com

NAC ARCHITECTURE
nacarchitecture.com
2025 FIRST AVE | SUITE 200
SEATTLE WA 98121
P.206.441.4322

© 2018 NAC Inc

DSHS NO	16-410G (2-1)
NAC NO	121-16004
DRAWN	DMY
CHECKED	BLC
DATE	03/16/2018

FIRST FLOOR SLAB/FRAMING PLAN

S3.12

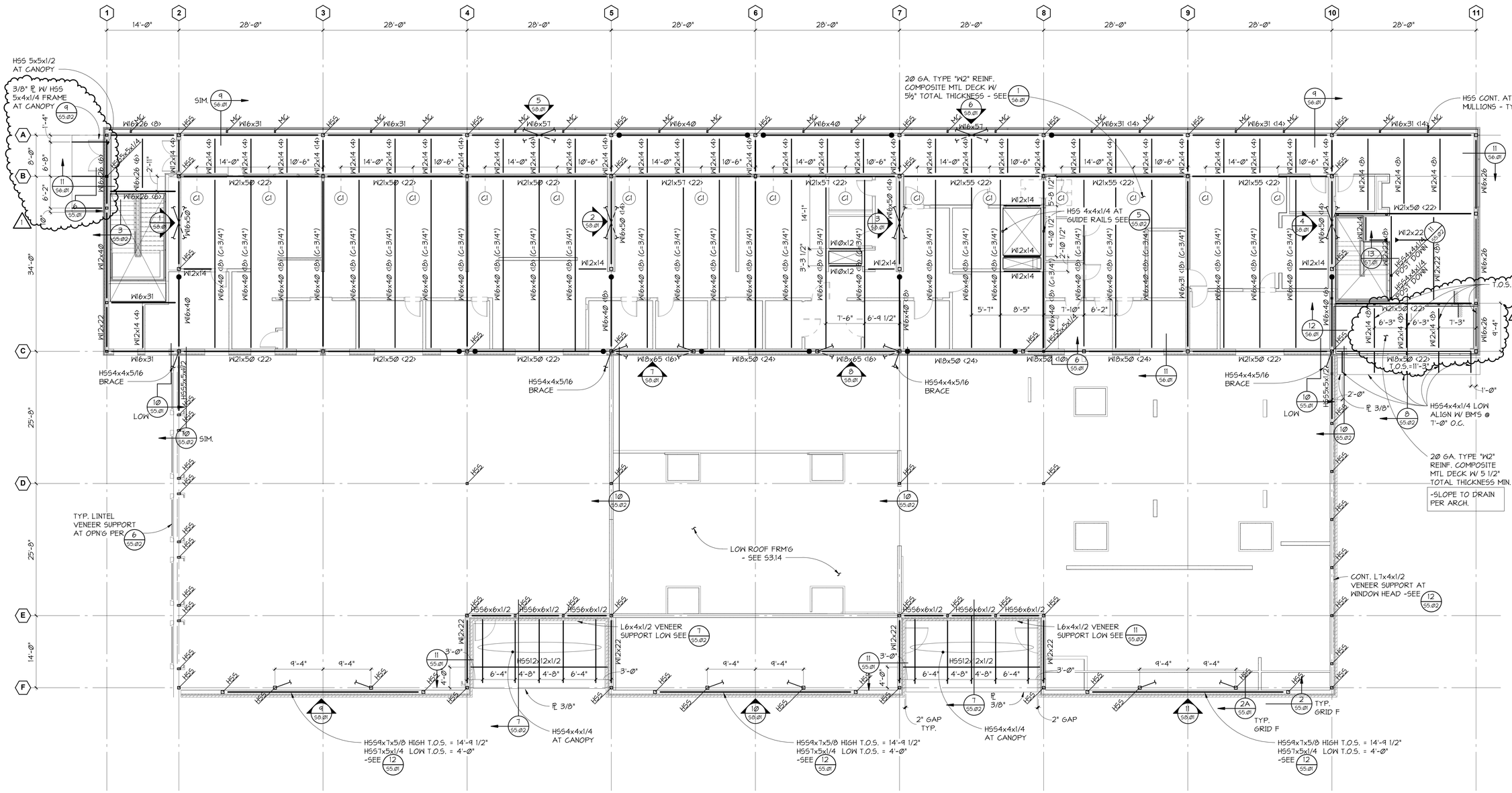

NORTH

1 S3.13 SECOND FLOOR FRAMING PLAN

1/8" = 1'-Ø"

FLOOR FRAMING NOTES:

1. INDICATES EXTERIOR STUD WALL EXTENDING ABOVE THE FLOOR STRUCTURE UNLESS NOTED OTHERWISE. SEE FOUNDATION NOTES FOR EXTERIOR STUD WALL REQUIREMENTS.
2. BF — INDICATES BRACED FRAME. FOR ELEVATIONS, BRACE SIZES AND DETAIL CALLOUTS - SEE SHEET S8.Ø1. ALL BEAMS THAT ARE PART OF A BRACED FRAME SHALL BE CONSIDERED "COLLECTOR" BEAMS.
3. HSS5x5x3/8 — INDICATES STEEL COLUMNS ORIGINATING AT FLOOR LEVEL UNLESS NOTED OTHERWISE.
4. HSS — INDICATES TYPE OF CONTINUOUS COLUMN FROM LEVEL BELOW AND CONTINUING ON TO LEVEL ABOVE.
5. INDICATES STEEL COLUMN DISCONTINUING AT FLOOR LEVEL.
6. INDICATES PENETRATION IN FLOOR STRUCTURE. SEE ARCHITECTURAL, ELECTRICAL, AND MECHANICAL FOR ADDITIONAL OPENINGS. FOR TYPICAL REINFORCING AROUND OPENINGS - SEE 2/S6.Ø1.
7. FOR TYPICAL COMPOSITE BEAM AND METAL DECK DETAILS - SEE SHEET S6.Ø1.
8. NON-STRUCTURAL STUD WALLS ARE SHOWN SCREENED FOR REFERENCE ONLY. FOR LOCATION - SEE ARCHITECTURAL. FOR BRACING AT TOPS OF STUD WALLS - SEE 1/S9.Ø3. FOR SCHEDULE AND TYPICAL FRAMING - SEE SHEETS S9.Ø1, S9.Ø2, AND S9.Ø3.
9. INDICATES DIRECTION OF SPAN FOR METAL DECK.
10. FOR TYPICAL STEEL CONNECTION DETAILS - SEE SHEET S5.Ø1. SEE BRACED FRAME ELEVATIONS FOR CONNECTION CALLOUTS. ALL BEAMS THAT ARE PART OF A BRACE FRAME SHALL BE CONSIDERED "COLLECTOR" BEAMS. FOR CONNECTION REQUIREMENTS AT EACH END OF "COLLECTOR" BEAMS - SEE 7/S8.12.

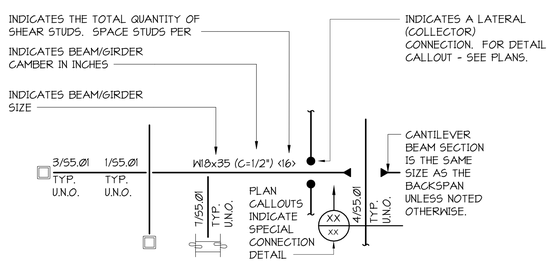

11. INDICATES STRUCTURAL WALL BELOW EXTENDING TO FLOOR STRUCTURE.
12. SEE ARCHITECTURAL FOR DEPRESSED/SLOPED ELEVATED SLABS. MAXIMUM DEPRESSION = 1/2".
13. STEEL MEMBERS ARE EQUALLY SPACED BETWEEN DIMENSION POINTS UNLESS NOTED OTHERWISE.
14. MC — INDICATES HSS 5x3x1/4 WALL COLUMN ALIGNED W/ WINDOW MULLIONS - FOR TYPICAL DETAILS SEE 9/S4.Ø2 & 9/S6.Ø1.
15. C1 — INDICATES STEEL BEAM PENETRATION FOR FIRE SPRINKLERS - SEE 8/S5.Ø1.
16. FOR ALL EXPOSED STEEL LOCATIONS AND REQUIRED FINISHES SEE ARCHITECTURAL DRAWINGS AND SPECIFICATIONS.

REVISIONS
1 ADDENDUM 1 01/26/18

CONFORMED SET

WESTERN STATE HOSPITAL
BUILDING 22, PATIENT SUPPORT CENTER
PATIENT SUPPORT CENTER
9601 STEILACOOM BLVD SW, LAKEWOOD, WASHINGTON 98498-7213

PCS Structural Solutions
Seattle | Tacoma | Portland
www.pcs-structural.com

NAC ARCHITECTURE
nacarchitecture.com
2025 FIRST AVE | SUITE 300
SEATTLE WA 98121
P:206.441.4522

DSHS NO	16-410G (2-1)
NAC NO	121-16004
DRAWN	DMY
CHECKED	BLC
DATE	03/16/2018

© 2018 NAC Inc.

SECOND FLOOR FRAMING PLAN

S3.13

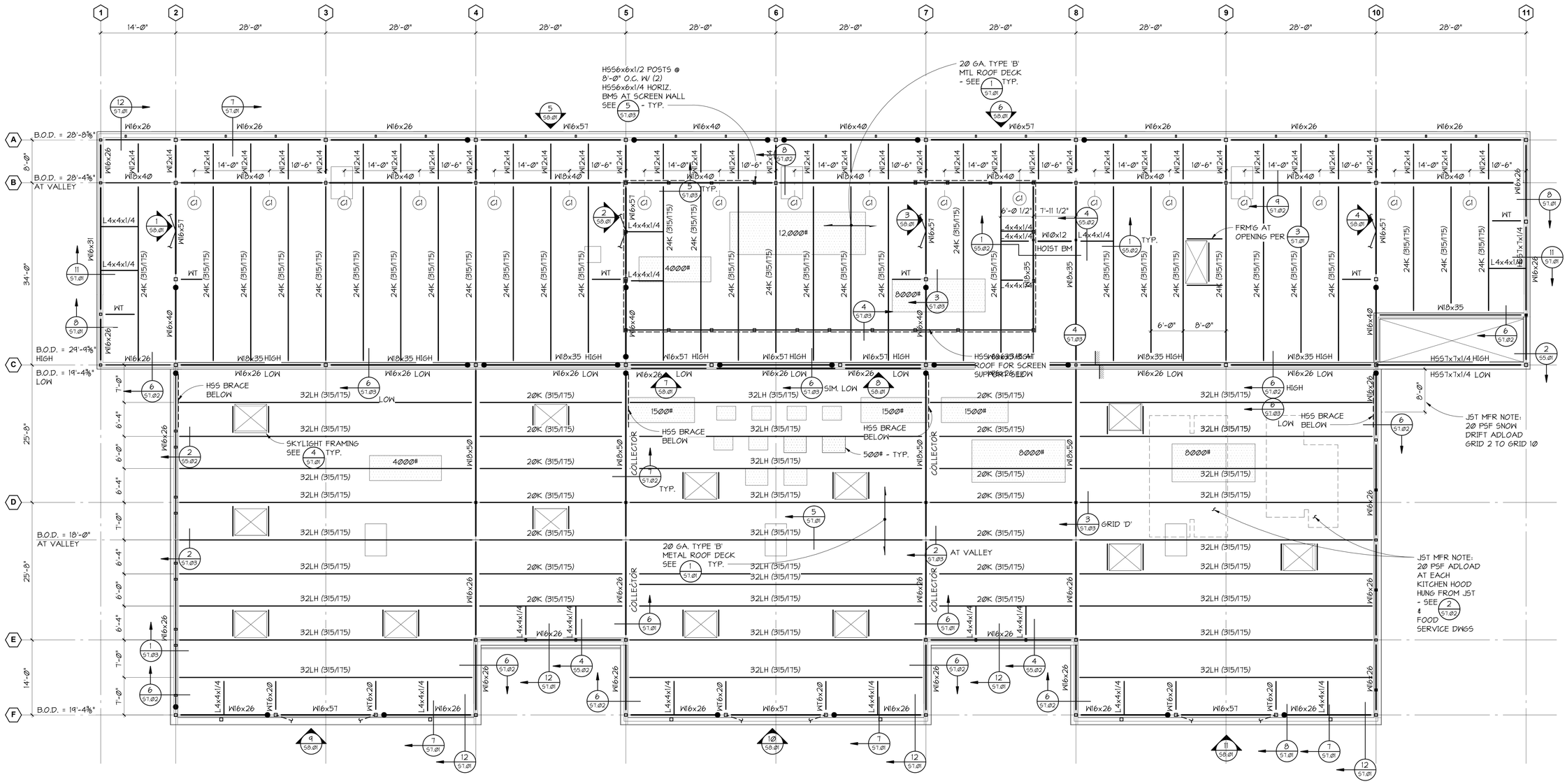

ROOF FRAMING PLAN

NORTH — 1 / S3.14 — 1/8" = 1'-0"

ROOF FRAMING NOTES:

1. INDICATES LIGHT GAUGE METAL STUD WALL EXTENDING ABOVE ROOF TO FORM A PARAPET.
2. INDICATES WALL BELOW EXTENDING TO ROOF STRUCTURE.
3. 1500# — INDICATES MECHANICAL UNIT WITH MAXIMUM WEIGHT SHOWN. FOR TYPICAL SUPPORT DETAIL - SEE 9/S1.01. FOR CLARITY, ONLY LARGE (OVER 600#) UNITS ARE SHOWN. FOR SUPPORT FRAMING AT MECHANICAL UNITS AND FANS (LESS THAN 600#) - SEE 3/S1.01. SEE MECHANICAL FOR LOCATIONS.
4. INDICATES DIRECTION OF SPAN FOR METAL DECK. FOR TYPICAL METAL DECK - SEE SHEET S1.01.
5. INDICATES PENETRATION IN ROOF. NOT ALL OPENINGS ARE SHOWN. FOR ADDITIONAL MISCELLANEOUS OPENINGS IN ROOF - SEE ARCHITECTURAL AND MECHANICAL DRAWINGS - SEE 2 AND 3/S1.01 FOR TYPICAL SUPPORT AROUND OPENINGS.
6. FOR TYPICAL STEEL CONNECTION DETAILS - SEE SHEET S5.01. SEE BRACED FRAME ELEVATIONS FOR CONNECTION CALLOUTS. ALL BEAMS THAT ARE PART OF A BRACE FRAME SHALL BE CONSIDERED "COLLECTOR" BEAMS. FOR CONNECTION REQUIREMENTS AT EACH END OF "COLLECTOR" BEAMS - SEE 7/S8.12.

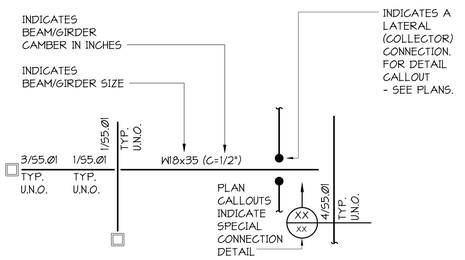

7. INDICATES STEEL COLUMN DISCONTINUING AT ROOF LEVEL.
8. FOR FALL RESTRAINT ON ROOF STRUCTURE SEE ARCHITECTURAL DRAWINGS. FOR TYPICAL DETAIL - SEE 10/S1.02. FALL RESTRAINT MUST BE CENTERED IN JOIST BAY AND LOCATED AT NEAREST JOIST PANEL POINT (WITHIN 4' OF APPROXIMATE LOCATION SHOWN ON STRUCTURAL PLANS).
9. "WT" — INDICATES STRUCTURAL WT SECTION IN ROOF PLANE. SEE APPLICABLE DETAIL ON PLANS FOR SIZE AND ORIENTATION.
10. "24LH (315/175) (C=_")" — 24" INDICATES DEPTH OF JOIST, "LH" INDICATES TYPE OF STEEL JOIST, "315" INDICATES TOTAL LOAD PER LINEAL FOOT AND "175" INDICATES LIVE LOAD PER LINEAL FOOT. BASE LINEAL LOADS ARE 315/175. LOADS INDICATED ON DRAWINGS AND IN DETAILS ARE IN ADDITION TO THOSE NOTED ABOVE INCLUDING BRACING LOADS AND MECHANICAL UNIT LOADS. SNOW DRIFT LOADS ARE NOT INCLUDED IN JOIST LINEAL LOAD CALLOUT. REFER TO PLAN FOR SNOW DRIFT LOADS TO BE ADDED TO JOISTS. SEE 2/S1.02 FOR ADDITIONAL "ADD LOADS" IN BASE DESIGN OF JOISTS.

11. FOR MAXIMUM ALLOWABLE MISCELLANEOUS LOADS SUPPORTED FROM ROOF JOISTS - SEE 2/S1.02. GENERAL CONTRACTOR SHALL COORDINATE MAIN SPRINKLER LINE SUPPORT LOCATIONS WITH JOIST MANUFACTURER PRIOR TO SHOP DRAWING SUBMITTAL TO DESIGN TEAM.
12. JOIST BRIDGING IS NOT SHOWN ON ROOF FRAMING PLAN FOR CLARITY SINCE LAYOUTS AND SPACING VARY PER MANUFACTURER. FOR TYPICAL CONNECTIONS AT END OF BRIDGING ROWS - SEE 4 AND 5/S1.02. JOIST MANUFACTURER TO PROVIDE ALL BRIDGING AND ERECTION AIDS PER SJI.
13. STEEL MEMBERS ARE EQUALLY SPACED BETWEEN DIMENSION POINTS UNLESS NOTED OTHERWISE.
14. C1 — INDICATES STEEL BEAM PENETRATION FOR FIRE SPRINKLERS - SEE 8/S5.01.
15. FOR ALL EXPOSED STEEL LOCATIONS AND REQUIRED FINISHES SEE ARCHITECTURAL DRAWINGS AND SPECIFICATIONS.

REVISIONS
2 ADDENDUM 2 02/16/18

CONFORMED SET

WESTERN STATE HOSPITAL
BUILDING 22, PATIENT SUPPORT CENTER
PATIENT SUPPORT CENTER
9601 STEILACOOM BLVD SW, LAKEWOOD, WASHINGTON 98498-7213

PCS Structural Solutions
Seattle | Tacoma | Portland
www.pcs-structural.com

NAC ARCHITECTURE
nacarchitecture.com
2025 FIRST AVE | SUITE 300
SEATTLE WA 98121
P.206.441.4522

DSHS NO	16-410G (2-1)
NAC NO	121-16004
DRAWN	DMY
CHECKED	BLC
DATE	03/16/2018

© 2018 NAC INC

ROOF FRAMING PLAN

S3.14

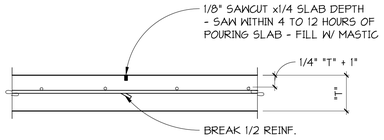

TYPICAL CONTROL JOINT FOR SLAB ON GRADE

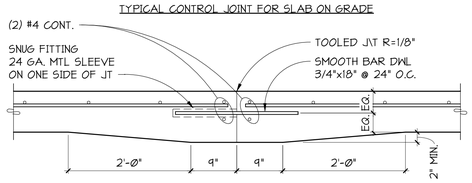

TYPICAL CONSTRUCTION JOINT FOR SLAB ON GRADE

1 54.Ø1 **SECTION**
NO SCALE

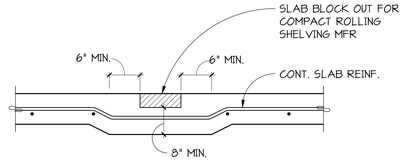

2 54.Ø1 **SECTION**
1" = 1'-Ø"

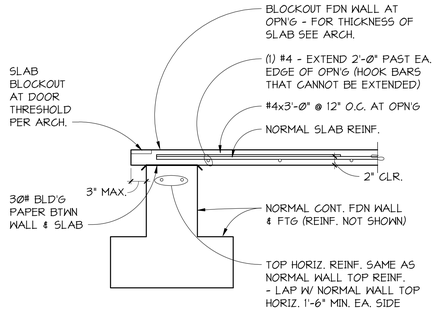

TYPICAL SLAB AT EXTERIOR OPENING

3 54.Ø1 **SECTION**
NO SCALE

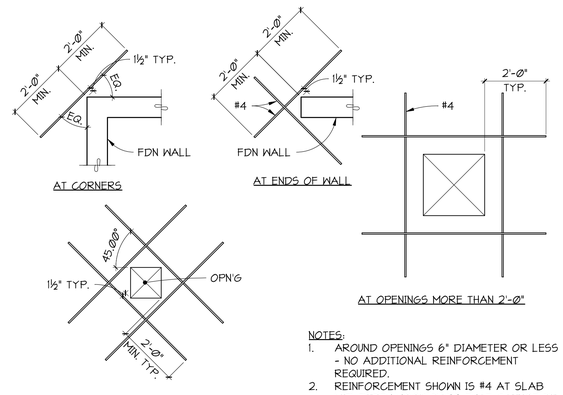

NOTES:
1. AROUND OPENINGS 6" DIAMETER OR LESS - NO ADDITIONAL REINFORCEMENT REQUIRED.
2. REINFORCEMENT SHOWN IS #4 AT SLAB MID-DEPTH HOOK BARS THAT CANNOT BE EXTENDED.

TYPICAL SLAB ON GRADE DISCONTINUITY REINFORCEMENT

4 54.Ø1 **PLAN DETAILS**
NO SCALE

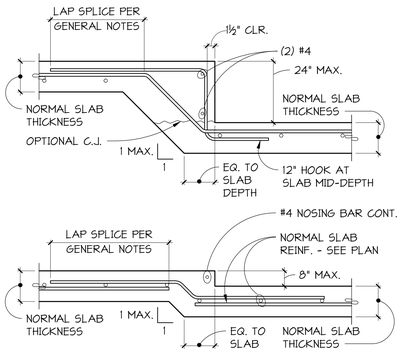

TYPICAL SLAB STEPS OR DEPRESSIONS

5 54.Ø1 **SECTION**
NO SCALE

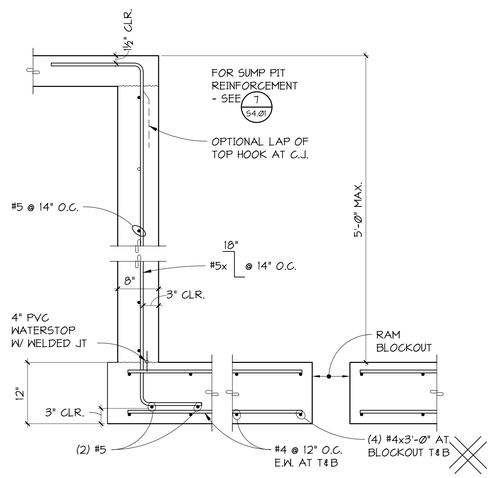

TYPICAL ELEVATOR PIT

6 54.Ø1 **SECTION**
NO SCALE

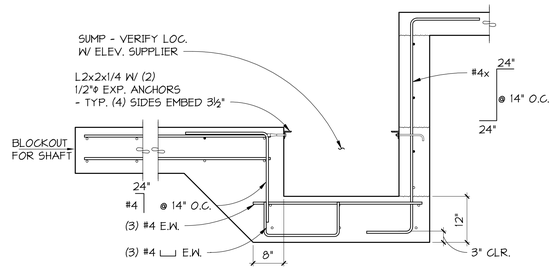

TYPICAL SUMP PIT

7 54.Ø1 **SECTION**
NO SCALE

TYPICAL STAIR ON GRADE

8 54.Ø1 **SECTION**
NO SCALE

NOTE:
SEE ARCHITECT FOR ADDITIONAL
STAIR REQUIREMENTS.

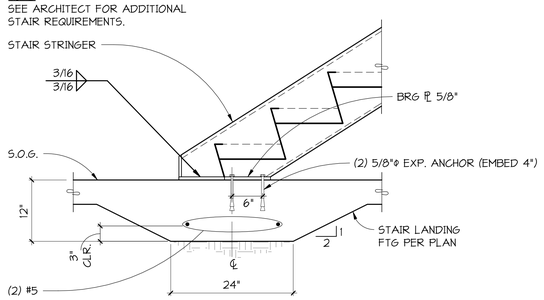

TYPICAL STAIR STRINGER BASE CONNECTION

10 54.Ø1 **SECTION**
1" = 1'-Ø"

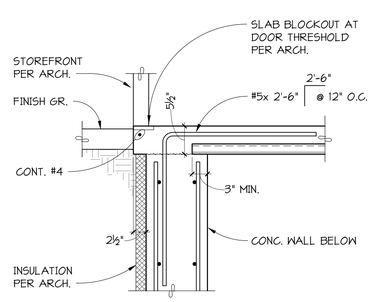

11 54.Ø1 **SECTION**
1" = 1'-Ø"

REVISIONS

CONFORMED SET

WESTERN STATE HOSPITAL
BUILDING 22, PATIENT SUPPORT CENTER
PATIENT SUPPORT CENTER
9601 STEILACOOM BLVD SW, LAKEWOOD, WASHINGTON 98498-7213

PCS Structural Solutions
Seattle | Tacoma | Portland
www.pcs-structural.com

NAC ARCHITECTURE
nacarchitecture.com
2025 FIRST AVE | SUITE 300
SEATTLE WA 98121
P:206.441.4522

© 2016 NAC Inc

DSHS NO	16-410G (2-1)
NAC NO	121-16004
DRAWN	DMY
CHECKED	BLC
DATE	03/16/2018

FOUNDATION DETAILS

S4.01

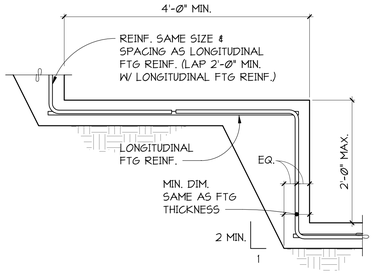

TYPICAL STEPPED FOOTING

1 S4.02 **DETAIL** NO SCALE

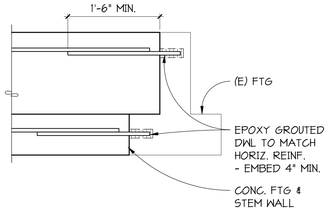

NEW FOOTING/EXISTING FOOTING CONNECTION

2 S4.02 **SECTION** NO SCALE

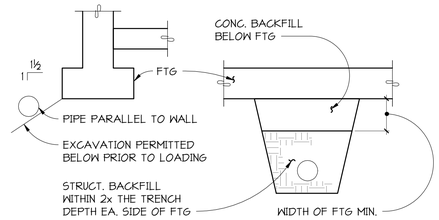

TYPICAL FOR PARALLEL PIPES ADJACENT TO FOOTINGS

TYPICAL FOR PERPENDICULAR PIPES UNDER FOOTINGS

NOTES:
1. FOUNDATIONS SHALL NOT BE LOADED PRIOR TO COMPLETING STRUCTURAL BACKFILL UNDER AND NEAR FOOTINGS.
2. CONCRETE BACKFILL SHALL BE USED UNDER FOOTINGS WHERE 95% COMPACTION CANNOT BE ACCOMPLISHED.
3. ALL STRUCTURAL BACKFILL NOTED SHALL BE COMPACTED TO 95% OF MAXIMUM DENSITY PER ASTM.
4. A PIPE SLEEVE SHALL BE PROVIDED FOR SHALLOW PIPES CAST IN CONCRETE.
5. PIPES SHALL NOT BE PLACED IN THE FOOTING WITHOUT SPECIFIC APPROVAL FROM THE ENGINEER.
6. FOR VARIATIONS CONTACT ENGINEER.

3 S4.02 **SECTION** NO SCALE

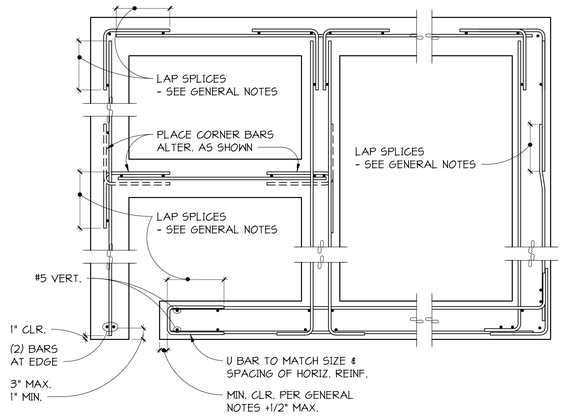

NOTES:
1. VERTICAL REINFORCEMENT SHOWN IS ADDITIONAL IF NORMAL STEM WALL REINFORCEMENT IS NOT IN PROPER LOCATION.
2. CORNER BARS ARE SAME SIZE AND SPACING AS HORIZONTAL REINFORCEMENT.
3. 90° STANDARD HOOK MAY BE SUBSTITUTED FOR CORNER BARS - SEE NOTE #5.
4. REINFORCEMENT AT ALL CORNERS, ENDS, AND INTERSECTIONS OF WALLS SHALL BE PLACED IN ACCORDANCE WITH APPROPRIATE DETAIL SHOWN.
5. USE 90° STANDARD HOOK FOR EMBEDMENT LESS THAN 24" PAST FACE OF WALL.

TYPICAL REINFORCING PLACEMENT FOR CAST IN PLACE CONCRETE WALLS AND STEM WALLS

4 S4.02 **DETAIL** NO SCALE

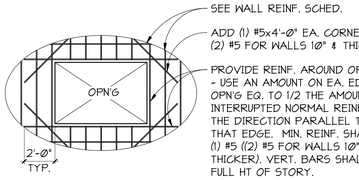

TYPICAL AT OPENINGS IN CAST IN PLACE CONCRETE WALLS

5 S4.02 **SECTION** NO SCALE

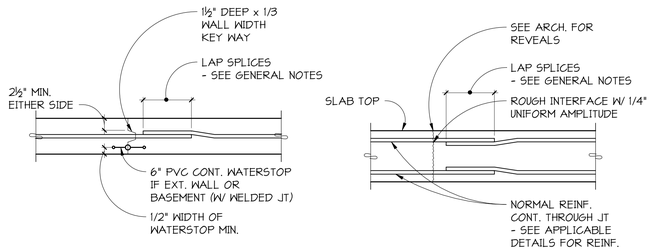

TYPICAL AT VERTICAL WALL JOINTS

TYPICAL AT CONCRETE GRADE BEAMS AND FOOTINGS

NOTE:
OBTAIN APPROVAL OF ENGINEER FOR LOCATION OF ANY CONSTRUCTION JOINT

TYPICAL FOR CAST IN PLACE CONCRETE WALLS, GRADE BEAMS, AND FOOTINGS

6 S4.02 **CONSTRUCTION JOINTS** NO SCALE

MARK	DIMENSIONS "W"	DIMENSIONS "T"	REINF. E.W.
F3.Ø	3'-Ø"	11"	(3) #4
F4.Ø	4'-Ø"	11"	(4) #5
F5.Ø	5'-Ø"	14"	(5) #6
F7.Ø	7'-Ø"	18"	(7) #6

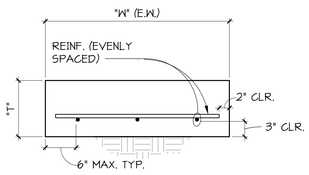

SECTION

NOTES:
1. CENTER ALL FOOTINGS ON COLUMN ABOVE EXCEPT AS SHOWN OTHERWISE.
2. FOOTINGS SHALL BEAR ON UNDISTURBED OR COMPACTED MATERIAL - SEE GENERAL NOTES. DESIGN BEARING PRESSURE IS 3500 PSF.

TYPICAL CONCRETE SPREAD FOOTING DETAILS

7 S4.02 **SECTION** NO SCALE

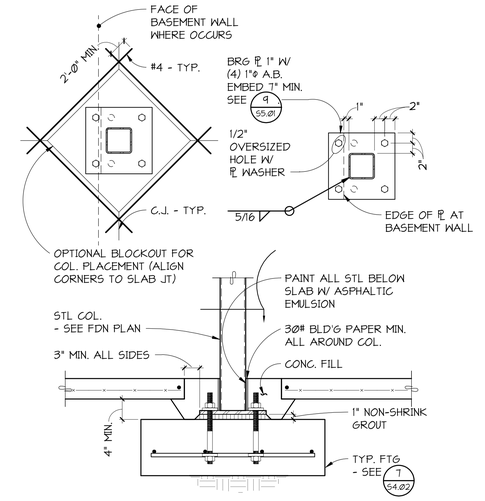

TYPICAL STEEL COLUMN AT SPREAD FOOTING

8 S4.02 **SECTION** NO SCALE

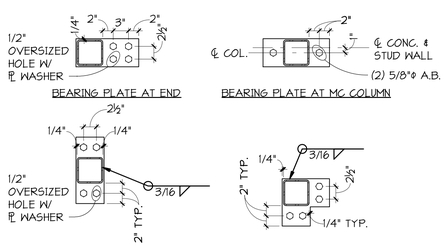

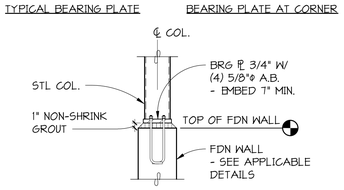

TYPICAL STEEL COLUMN BASE AT CONTINUOUS FOUNDATION WALL

9 S4.02 **SECTION** NO SCALE

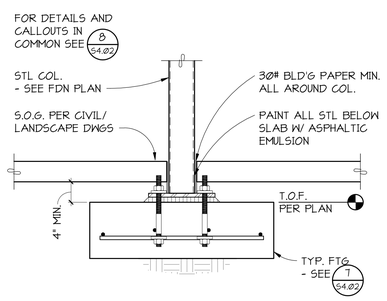

TYPICAL STEEL COLUMN AT EXTERIOR SPREAD FOOTING

10 S4.02 **SECTION** 1" = 1'-Ø"

REVISIONS

CONFORMED SET

WESTERN STATE HOSPITAL
BUILDING 22, PATIENT SUPPORT CENTER
PATIENT SUPPORT CENTER
9601 STEILACOOM BLVD SW, LAKEWOOD, WASHINGTON 98498-7213

PCS Structural Solutions
Seattle | Tacoma | Portland
www.pcs-structural.com

NAC ARCHITECTURE
nacarchitecture.com
2025 FIRST AVE | SUITE 300
SEATTLE, WA 98121
P.206.441.4522

© 2018 NAC Inc

DSHS NO	16-410G (2-1)
NAC NO	121-16004
DRAWN	DMY
CHECKED	BLC
DATE	03/16/2018

FOUNDATION DETAILS

S4.02

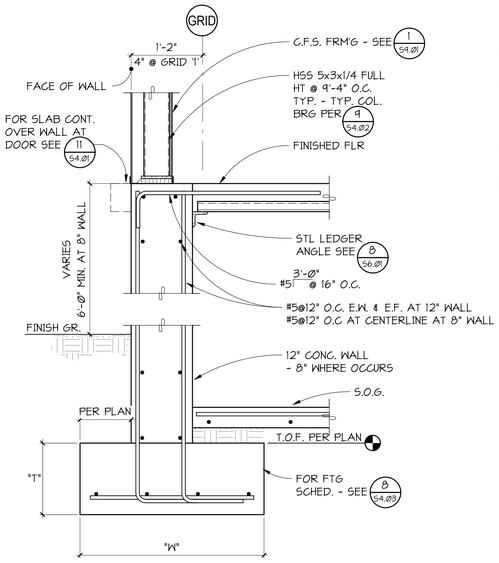

1 S4.03 SECTION
1" = 1'-0"

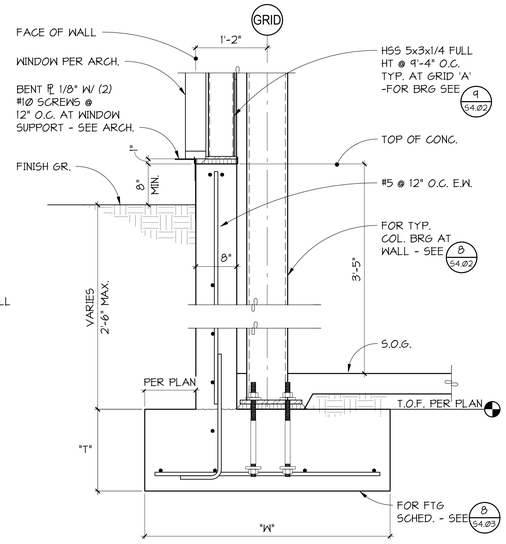

2 S4.03 SECTION
1" = 1'-0"

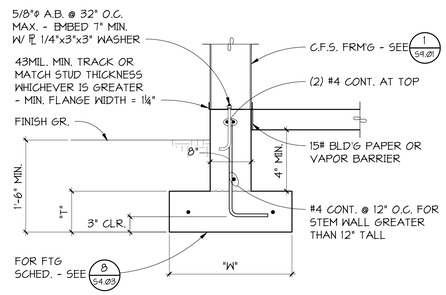

TYPICAL FOUNDATION AT EXTERIOR NON-BEARING METAL STUD WALL

3 S4.03 SECTION
1" = 1'-0"

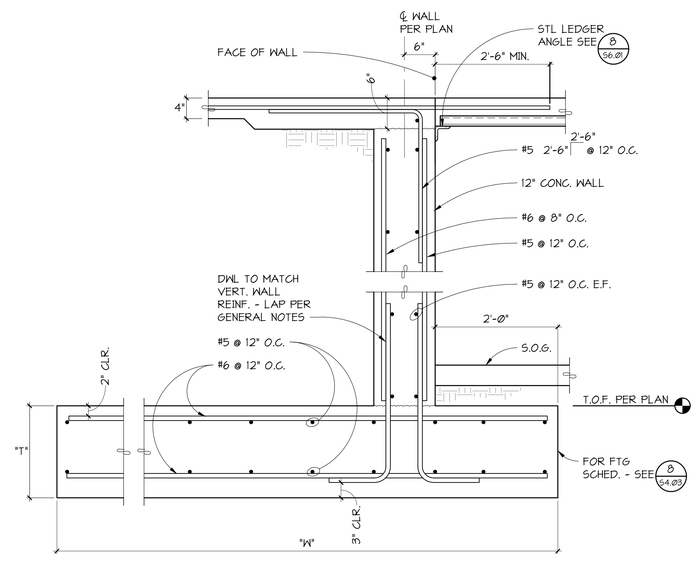

4 S4.03 SECTION
1" = 1'-0"

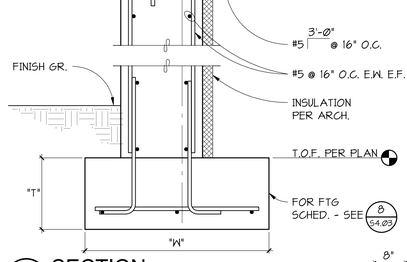

5 S4.03 SECTION
1" = 1'-0"

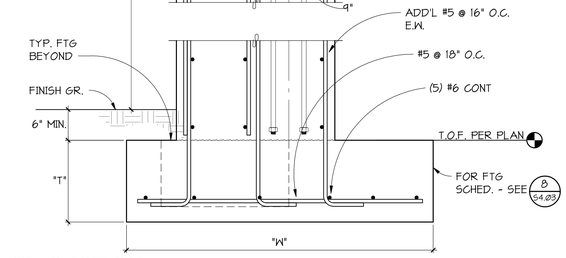

6 S4.03 SECTION
1" = 1'-0"

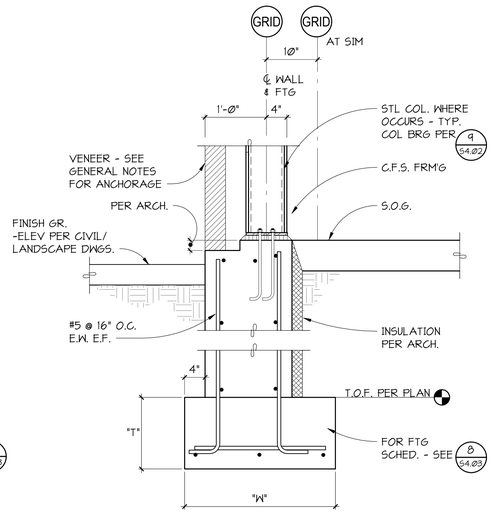

7 S4.03 SECTION
1" = 1'-0"

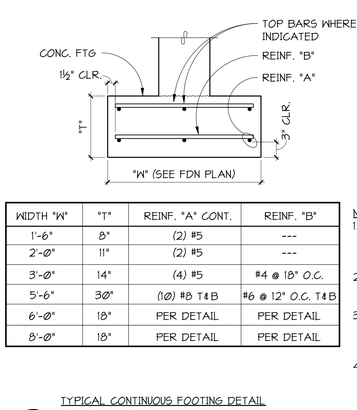

WIDTH "W"	"T"	REINF. "A" CONT.	REINF. "B"
1'-6"	8"	(2) #5	---
2'-0"	11"	(2) #5	---
3'-0"	14"	(4) #5	#4 @ 18" O.C.
5'-6"	30"	(10) #8 T&B	#6 @ 12" O.C. T&B
6'-0"	18"	PER DETAIL	PER DETAIL
8'-0"	18"	PER DETAIL	PER DETAIL

NOTES:
1. FOOTINGS SHALL BEAR ON UNDISTURBED OR COMPACTED MATERIAL - SEE GENERAL NOTES.
2. EXTEND FOOTINGS 6" MINIMUM PAST ENDS OF WALL UNLESS OTHERWISE NOTED.
3. WHERE FOOTINGS CHANGE WIDTHS LAP REINFORCING "A". "Ls" PER GENERAL NOTES.
4. FOR REINFORCEMENT AT 8'-0" WIDE FOOTING - SEE 4/S4.03.

TYPICAL CONTINUOUS FOOTING DETAIL

8 S4.03 SECTION
1" = 1'-0"

SCHEDULE			
H MAX.	"W"	"T"	REINF. "A"
8'-0"	5'-0"	14"	#6 @ 12" O.C.
6'-0"	3'-6"	14"	#5 @ 16" O.C.
4'-0"	2'-6"	14"	#5 @ 16" O.C.

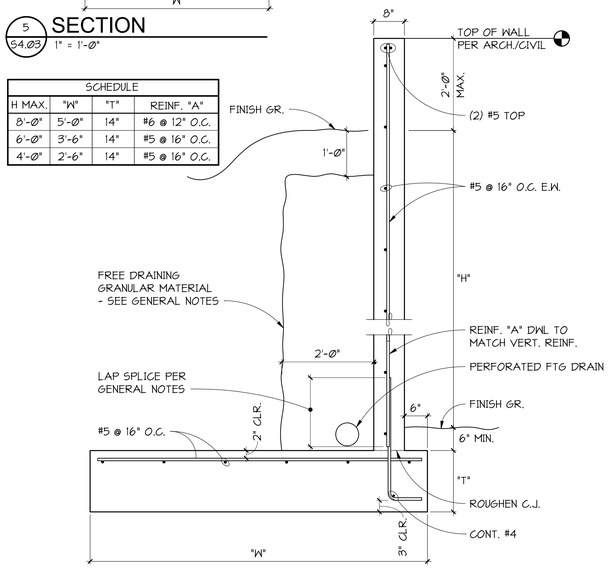

TYPICAL SITE RETAINING WALL

9 S4.03 DETAIL
3/4" = 1'-0"

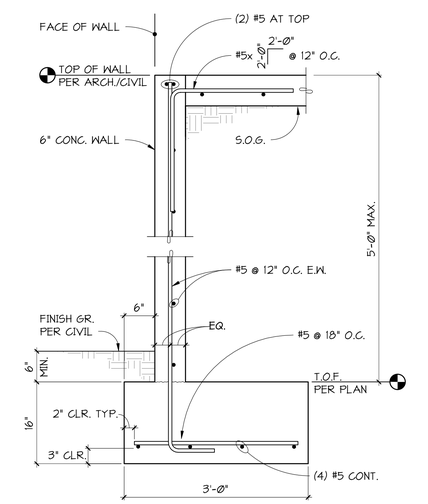

TYPICAL SITE WALL AT LOADING DOCK

10 S4.03 SECTION
1" = 1'-0"

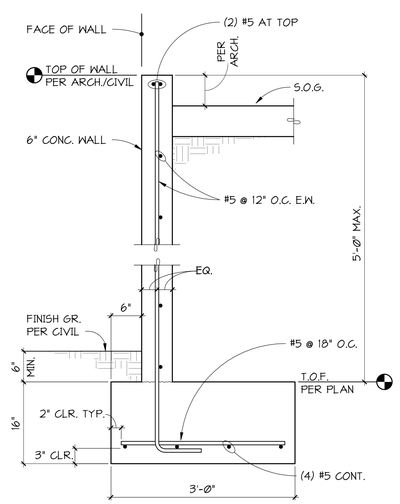

TYPICAL SITE WALL ≤ 5'-0"

11 S4.03 SECTION
1" = 1'-0"

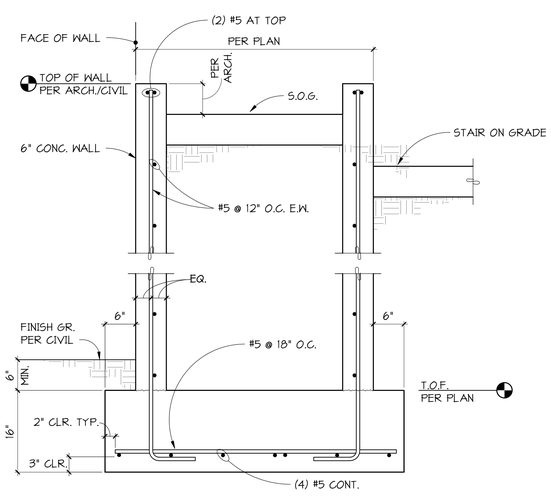

12 S4.03 SECTION
1" = 1'-0"

REVISIONS

CONFORMED SET

WESTERN STATE HOSPITAL
BUILDING 22, PATIENT SUPPORT CENTER
9601 STEILACOOM BLVD SW, LAKEWOOD, WASHINGTON 98498-7213
PATIENT SUPPORT CENTER

PCS Structural Solutions
Seattle | Tacoma | Portland
www.pcs-structural.com

NAC ARCHITECTURE
nacarchitecture.com
2025 FIRST AVE | SUITE 200
SEATTLE WA 98121
P:206.441.4522

DSHS NO	16-410G (2-1)
NAC NO	121-16004
DRAWN	DMY
CHECKED	BLC
DATE	03/16/2018

© 2018 NAC Inc.

FOUNDATION DETAILS

S4.03

3/16/2018 1:33:12 PM C:_Revit Models\16351 WSH Kitchen Commisary R2017 (Central)_dmorford*PCS.rvt

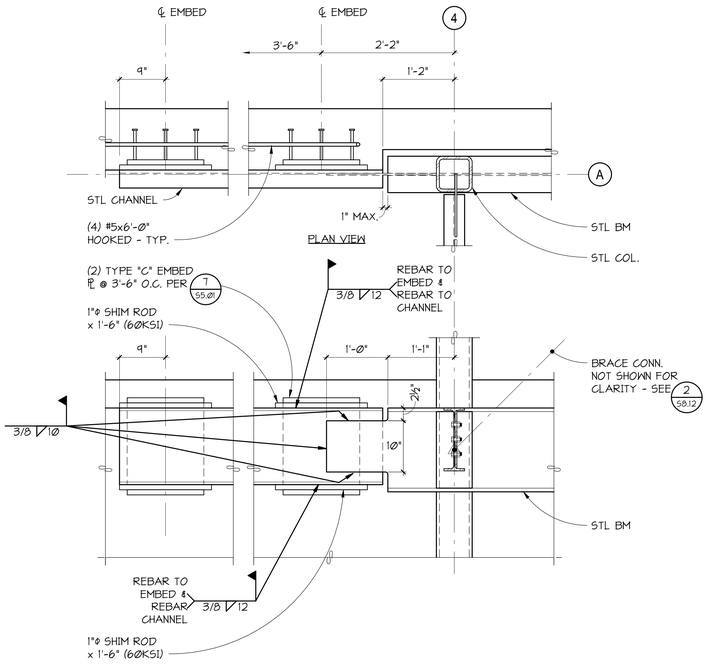

1/S4.04 SECTION
1" = 1'-0"

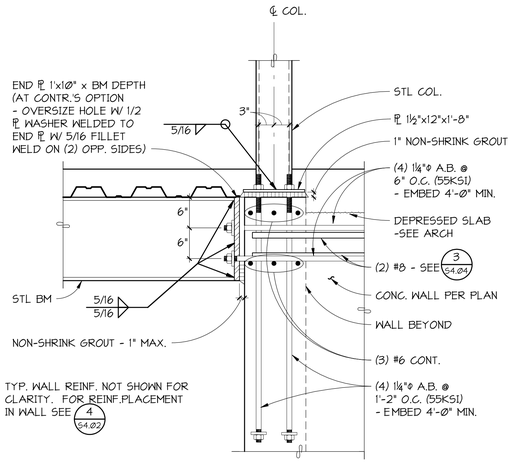

2/S4.04 SECTION
1" = 1'-0"

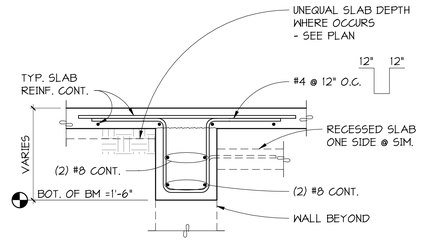

3/S4.04 SECTION
1" = 1'-0"

REVISIONS

CONFORMED SET

WESTERN STATE HOSPITAL
BUILDING 22, PATIENT SUPPORT CENTER
PATIENT SUPPORT CENTER
9601 STEILACOOM BLVD SW, LAKEWOOD, WASHINGTON 98498-7213

PCS Structural Solutions
Seattle | Tacoma | Portland
www.pcs-structural.com

NAC ARCHITECTURE
nacarchitecture.com
2025 FIRST AVE | SUITE 300
SEATTLE WA 98121
P:206.441.4522

© 2016 NAC Inc

DSHS NO	16-410G (2-1)
NAC NO	121-16004
DRAWN	DMY
CHECKED	BLC
DATE	03/16/2018

FOUNDATION DETAILS

S4.04

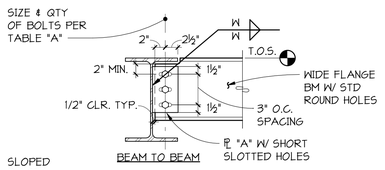

BEAM TO BEAM

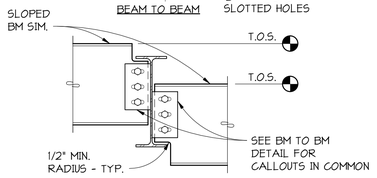

BEAM TO BEAM AT VARYING ELEVATION

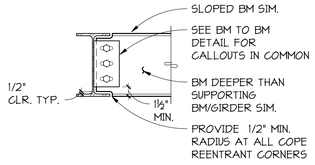

BEAM TO BEAM SAME DEPTH

TABLE A			
SUPPORTED BM SIZE	# OF 7/8"ø A325N BOLTS	SHEAR ℄ THICKNESS "A"	WELD "W"
W10	2	3/8"	5/16"
W12, W14	3	3/8"	5/16"
W16, W18	4	3/8"	5/16"
W21	5	3/8"	5/16"
W24	6	3/8"	5/16"

TYPICAL STEEL DETAIL

1 / 55.01 DETAIL

NO SCALE

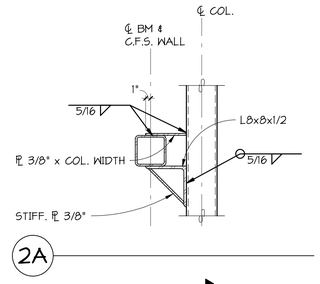

2A

TYPICAL HOLLOW STRUCTURAL SECTION BEAM TO HOLLOW STRUCTURAL SECTION COLUMN CONNECTION

2 / 55.01 DETAIL

NO SCALE

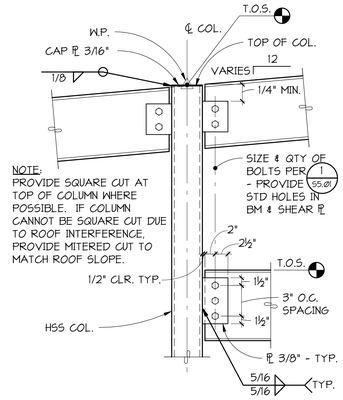

TYPICAL BEAM FRAMING INTO HOLLOW STRUCTURAL SECTION COLUMN

3 / 55.01 DETAIL

NO SCALE

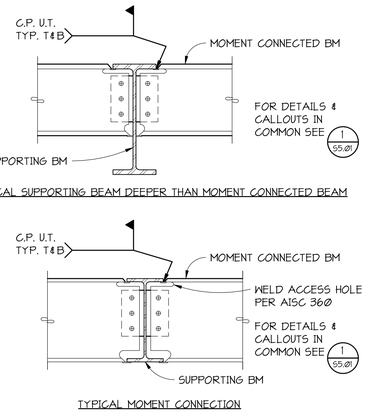

TYPICAL SUPPORTING BEAM DEEPER THAN MOMENT CONNECTED BEAM

TYPICAL MOMENT CONNECTION

4 / 55.01 DETAIL

NO SCALE

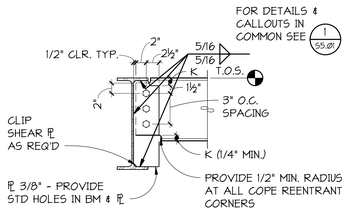

TYPICAL BEAM FRAMING AT FULL DEPTH SHEAR PLATE

5 / 55.01 DETAIL

NO SCALE

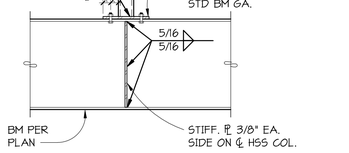

TYPICAL STEEL BEAM CONNECTION TO COLUMN ABOVE

6 / 55.01 DETAIL

NO SCALE

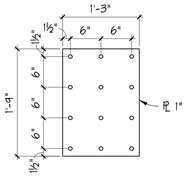

EMBED TYPE "C" AT COLLECTOR CHANNEL

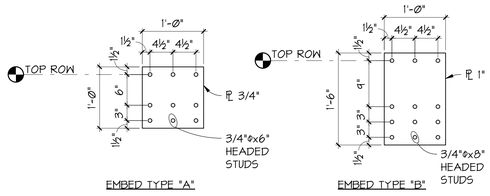

TYPICAL STEEL EMBED CONNECTION

7 / 55.01 DETAIL

NO SCALE

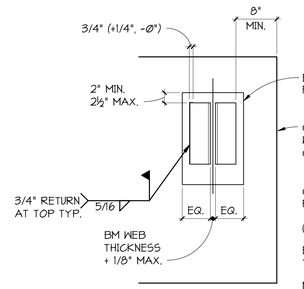

TABLE E		
BEAM SIZE	EMBED ℄ TYP.	# OF 7/8"ø A325N BOLTS
W10, W12	"A"	2
W14, W16	"A"	3
W18, W21, W24	"B"	4
C15	"C"	N/A

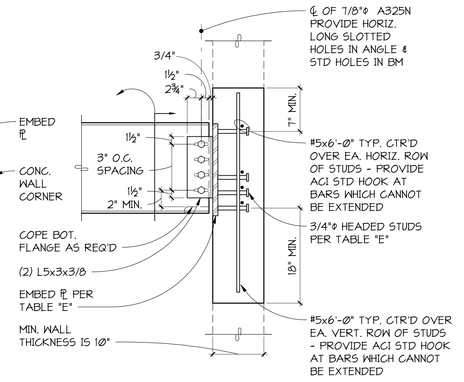

TYPICAL STEEL EMBED CONNECTION

8 / 55.01 DETAIL

NO SCALE

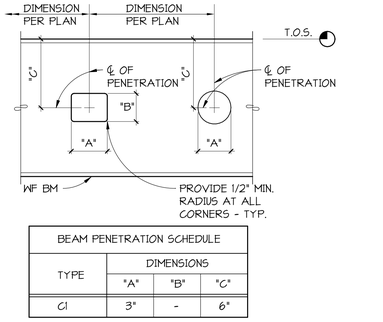

BEAM PENETRATION SCHEDULE			
TYPE	DIMENSIONS		
	"A"	"B"	"C"
C1	3"	-	6"

TYPICAL BEAM WEB PENETRATION

9 / 55.01 DETAIL

NO SCALE

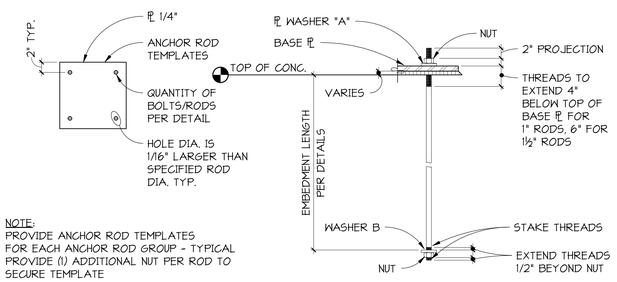

NOTE:
PROVIDE ANCHOR ROD TEMPLATES FOR EACH ANCHOR ROD GROUP - TYPICAL
PROVIDE (1) ADDITIONAL NUT PER ROD TO SECURE TEMPLATE

ANCHOR ROD		WASHER		NUT
SIZE	MATERIAL	TYPE	SIZE	
1"ø	A307 GRADE C OR F1554 GRADE 55	A	℄ 1/2"x3"xØ'-3" W/ 1⅛"ø HOLE CTR'D	A563 GRADE A HEAVY HEX
		B	ASTM F844 CARBON FLAT WASHER	

TYPICAL ANCHOR ROD/BOLT DETAIL

9 / 55.01 DETAIL

NO SCALE

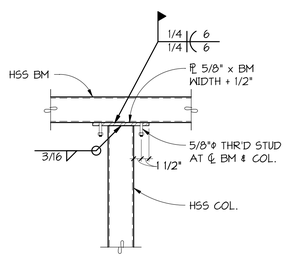

10 / 55.01 SECTION

1" = 1'-0"

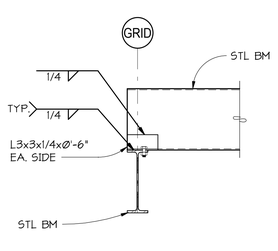

11 / 55.01 SECTION

1" = 1'-0"

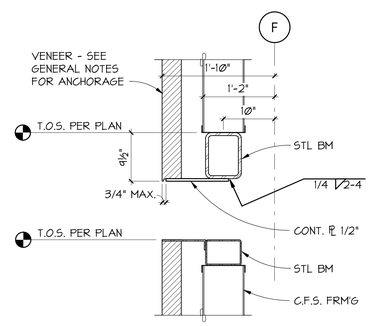

12 / 55.01 SECTION

1" = 1'-0"

REVISIONS

CONFORMED SET

WESTERN STATE HOSPITAL
BUILDING 22, PATIENT SUPPORT CENTER
PATIENT SUPPORT CENTER
9601 STEILACOOM BLVD SW, LAKEWOOD, WASHINGTON 98498-7213

PCS Structural Solutions
Seattle | Tacoma | Portland
www.pcs-structural.com

NAC ARCHITECTURE
nacarchitecture.com
2025 FIRST AVE | SUITE 300
SEATTLE WA 98121
P.206.441.4322

© 2018 NAC Inc

DSHS NO 16-410G (2-1)
NAC NO 121-16004
DRAWN DMY
CHECKED BLC
DATE 03/16/2018

STEEL DETAILS

S5.01

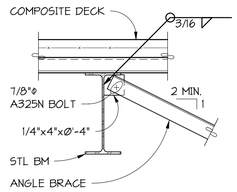

STEEL BEAM AT COMPOSITE DECK

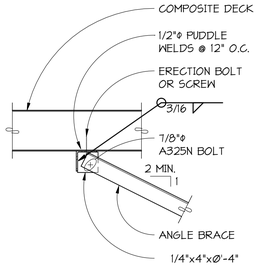

PARALLEL AT STEEL BEAM

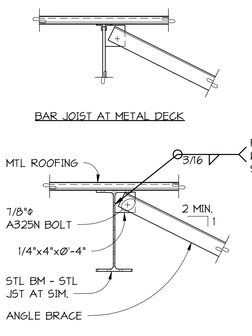

STEEL BEAM AT METAL DECK

TYPICAL BRACE CONNECTION TO STRUCTURE

1 55.Ø2 DETAIL

1" = 1'-Ø"

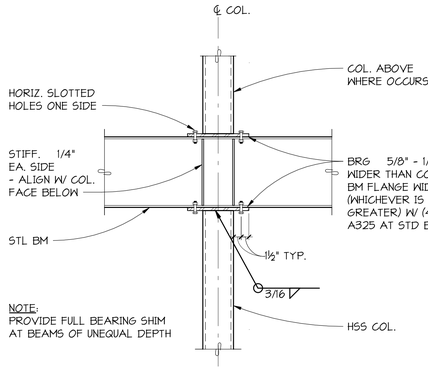

NOTE:
PROVIDE FULL BEARING SHIM AT BEAMS OF UNEQUAL DEPTH

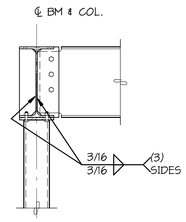

NOTE:
END PLATE FULL HEIGHT AT BEAM PERPENDICULAR - FOR SIZE AND HOLE LOCATION - SEE 1 55.Ø1

TYPICAL CONTINUOUS STEEL BEAM TO COLUMN CONNECTION

2 55.Ø2 DETAIL

1" = 1'-Ø"

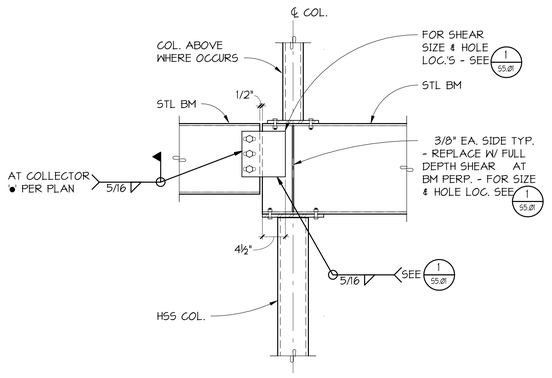

TYPICAL UNEQUAL DEPTH STEEL BEAM TO COLUMN CONNECTION

3 55.Ø2 DETAIL

1" = 1'-Ø"

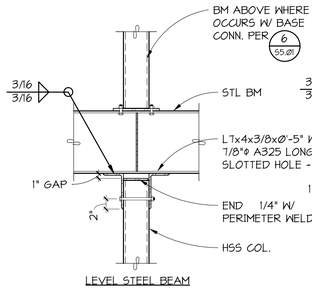

4 55.Ø2 SECTION

1" = 1'-Ø"

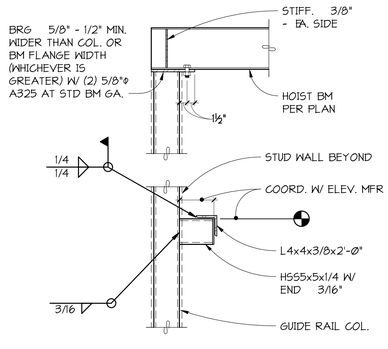

ELEVATOR GUIDE RAIL

5 55.Ø2 DETAIL

1" = 1'-Ø"

LINTEL ANGLE SCHEDULE		
MAXIMUM WIDTH OF OPENING	ANGLE SIZE	MINIMUM BEARING REQUIRED AT END OF ANGLE
5'-Ø"	L3½x3½x1/4	4"
8'-Ø"	L6x3½x5/16	4"
1Ø'-Ø"	L7x4x3/8	8"

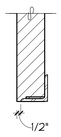

NOTE:
1. ALL LINTEL ANGLES SHALL BE GALVANIZED.

6 55.Ø2 DETAIL

1 1/2" = 1'-Ø"

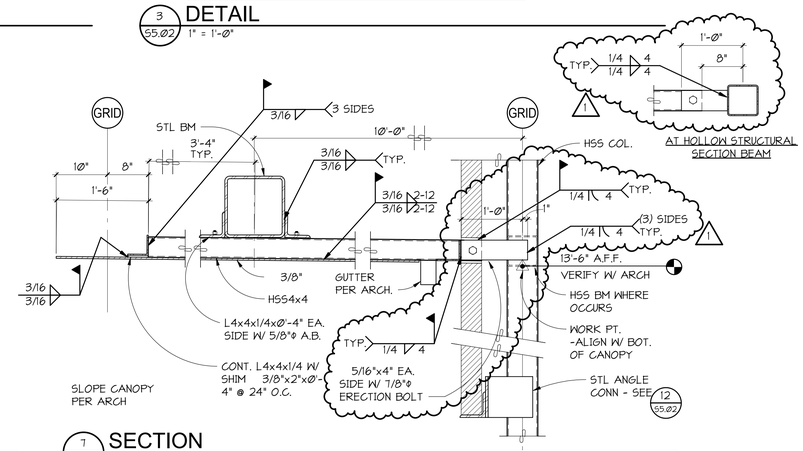

7 55.Ø2 SECTION

1" = 1'-Ø"

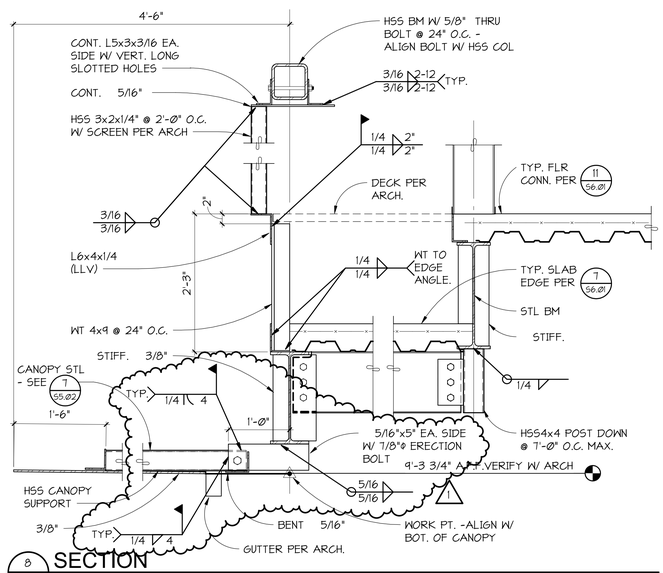

8 55.Ø2 SECTION

1" = 1'-Ø"

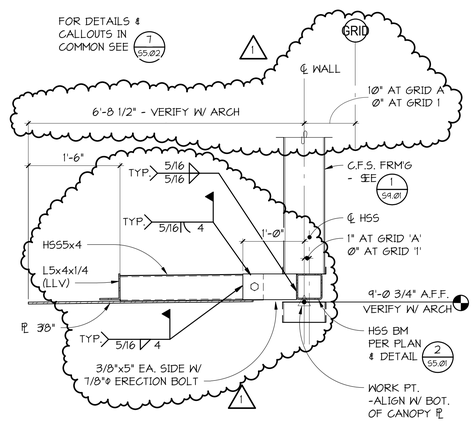

TYPICAL DOOR CANOPY

9 55.Ø2 SECTION

1" = 1'-Ø"

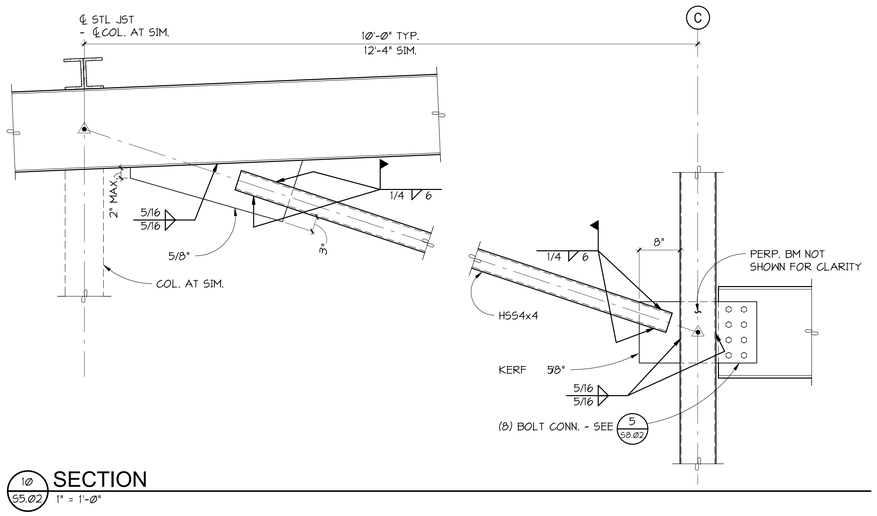

10 55.Ø2 SECTION

1" = 1'-Ø"

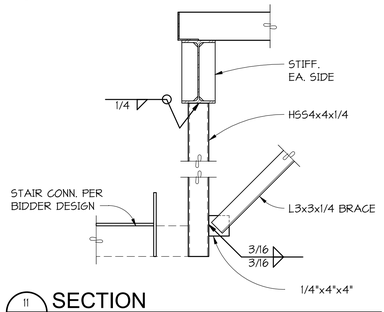

11 55.Ø2 SECTION

1" = 1'-Ø"

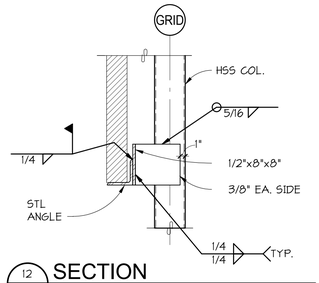

12 55.Ø2 SECTION

1" = 1'-Ø"

REVISIONS
1 ADDENDUM 1 01/26/18

CONFORMED SET

WESTERN STATE HOSPITAL
BUILDING 22, PATIENT SUPPORT CENTER
PATIENT SUPPORT CENTER
9601 STEILACOOM BLVD SW, LAKEWOOD, WASHINGTON 98498-7213

PCS Structural Solutions
Seattle | Tacoma | Portland
www.pcs-structural.com

NAC ARCHITECTURE
nacarchitecture.com
2025 FIRST AVE | SUITE 300
SEATTLE WA 98121
P.206.441.4522

© 2018 NAC Inc

DSHS NO	16-410G (2-1)
NAC NO	121-16004
DRAWN	DMY
CHECKED	BLC
DATE	03/16/2018

STEEL DETAILS

S5.02

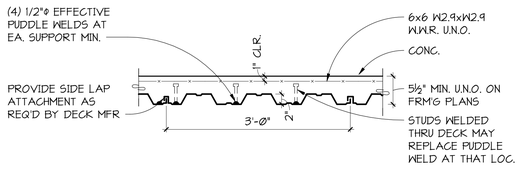

TYPE "N-2" MIN. DECK PROPERTIES		
GAUGE	I = (in.⁴/ft.)	+S/-S = (in.³/ft.)
20	.423	.361/.310
18	.555	.510/.511
16	.694	.634/.639

NOTES:
1. (2) SPAN MINIMUM, (3) SPAN PREFERRED, WHERE SIMPLE SPAN SHOWN ON DRAWINGS - GENERAL CONTRACTOR TO PROVIDE SHORING.
2. AT SUPPORTS PARALLEL TO CORRUGATIONS - PROVIDE PUDDLE WELDS AT 24" ON CENTER MAXIMUM.
3. CONDUIT NOT PERMITTED IN SLAB.
4. FOR EXPOSED SLAB LOCATIONS - SEE ARCHITECTURAL. FOR HEAVIER WELDED WIRE REINFORCING AND ADDITIONAL REQUIREMENTS - SEE 6/56.Ø1.

TYPICAL COMPOSITE FLOOR DECK
1 / 56.Ø1 DETAIL
NO SCALE

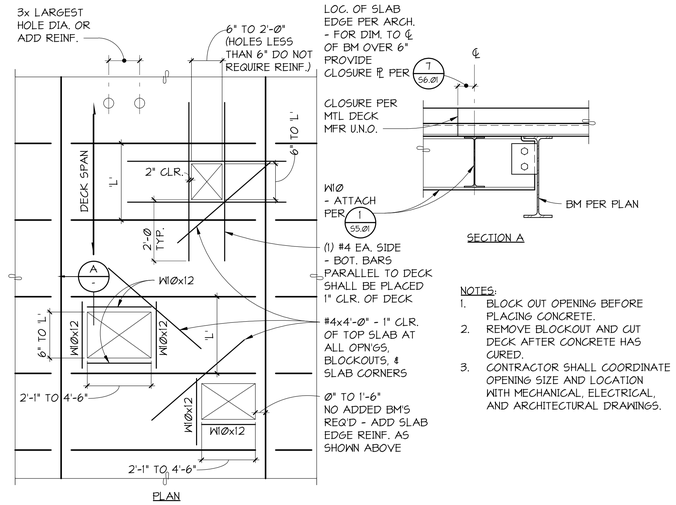

NOTES:
1. BLOCK OUT OPENING BEFORE PLACING CONCRETE.
2. REMOVE BLOCKOUT AND CUT DECK AFTER CONCRETE HAS CURED.
3. CONTRACTOR SHALL COORDINATE OPENING SIZE AND LOCATION WITH MECHANICAL, ELECTRICAL, AND ARCHITECTURAL DRAWINGS.

TYPICAL FLOOR PENETRATION REINFORCING
2 / 56.Ø1 DETAIL
NO SCALE

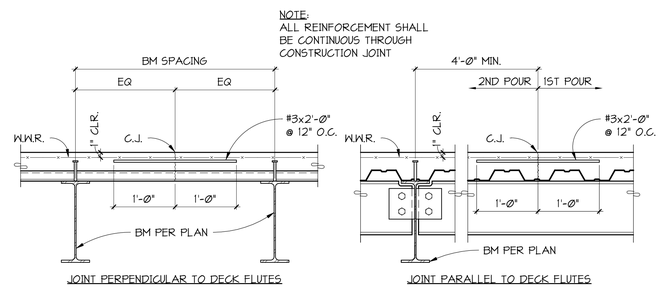

TYPICAL COMPOSITE DECK CONSTRUCTION JOINT
3 / 56.Ø1 SECTION
NO SCALE

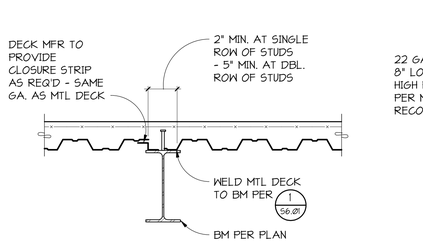

TYPICAL AT METAL DECK PARALLEL TO BEAM
4 / 56.Ø1 SECTION
NO SCALE

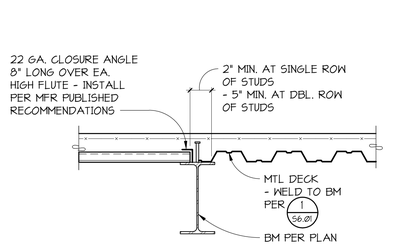

TYPICAL AT METAL DECK TRANSITION AT BEAM
5 / 56.Ø1 SECTION
NO SCALE

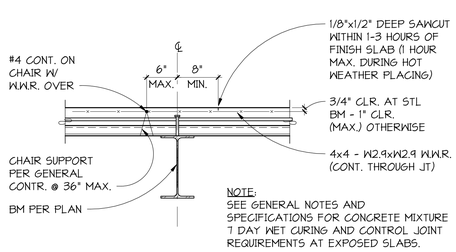

NOTE:
SEE GENERAL NOTES AND SPECIFICATIONS FOR CONCRETE MIXTURE 7 DAY WET CURING AND CONTROL JOINT REQUIREMENTS AT EXPOSED SLABS.

TYPICAL COMPOSITE DECK AT EXPOSED SLAB
6 / 56.Ø1 SECTION
NO SCALE

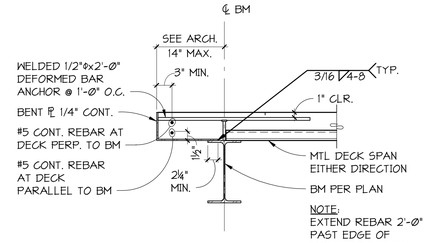

NOTE:
EXTEND REBAR 2'-Ø" PAST EDGE OF ISOLATED OPENING.

TYPICAL SLAB EDGE CONDITION
7 / 56.Ø1 SECTION
NO SCALE

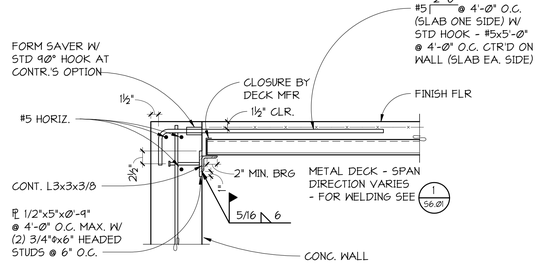

TYPICAL FLOOR METAL DECK CONNECTION AT CONCRETE WALL
8 / 56.Ø1 SECTION
1" = 1'-Ø"

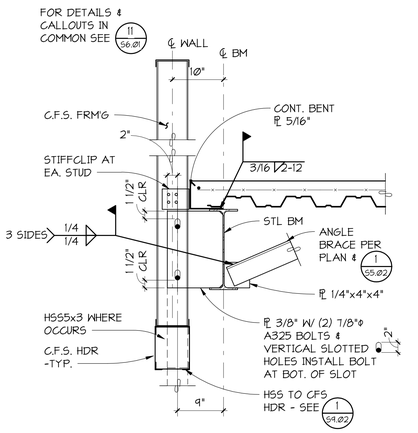

SECTION
9 / 56.Ø1 1" = 1'-Ø"

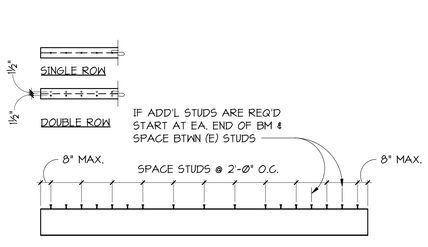

NOTES:
1. LOCATE STUDS AT CENTER OF BEAM FLANGE.
2. STUDS ARE 3/4" DIAMETER x 4½" LONG AFTER WELDING.
3. SEE FRAMING PLANS FOR NUMBER OF STUDS.
4. ALL BEAMS WITH STUDS ARE COMPOSITE STEEL BEAMS - SEE GENERAL NOTES.
5. PROVIDE A DOUBLE ROW OF STUDS AT BEAMS WHERE THE REQUIRED NUMBER OF STUDS EXCEEDS THE NUMBER THAT CAN FIT IN A SINGLE ROW AT 6" ON CENTER AT DECK PARALLEL TO BEAM OR 12" ON CENTER AT DECK PERPENDICULAR TO BEAM. STUDS SHOULD BE LOCATED IN DECK FLUTES PER AISC STRONG POSITION.

TYPICAL COMPOSITE BEAM DETAIL
10 / 56.Ø1 DETAIL
NO SCALE

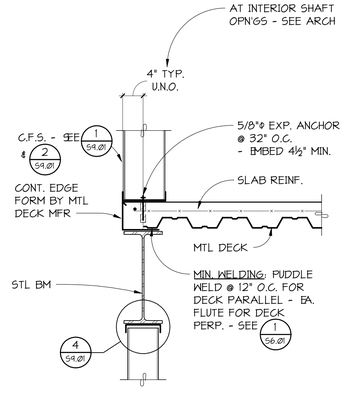

TYPICAL FLOOR TO PERIMETER BEAM CONNECTION
11 / 56.Ø1 1" = 1'-Ø"

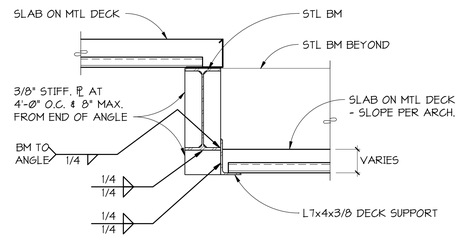

SECTION
12 / 56.Ø1 1" = 1'-Ø"

REVISIONS

CONFORMED SET

WESTERN STATE HOSPITAL
BUILDING 22, PATIENT SUPPORT CENTER
PATIENT SUPPORT CENTER
9601 STEILACOOM BLVD SW, LAKEWOOD, WASHINGTON 98498-7213

PCS Structural Solutions
Seattle | Tacoma | Portland
www.pcs-structural.com

NAC ARCHITECTURE
nacarchitecture.com
2025 FIRST AVE | SUITE 300
SEATTLE WA 98121
P.206.441.4522

© 2018 NAC Inc.

DSHS NO	16-410G (2-1)
NAC NO	121-16004
DRAWN	DMY
CHECKED	BLC
DATE	03/16/2018

FLOOR FRAMING DETAILS

S6.01



TYPE "B" MINIMUM DECK PROPERTIES		
GAUGE	I = (in.⁴/ft.)	+S/-S = (in.³/ft)
20	.216	.235/.248
18	.302	.322/.335
16	.377	.411/.417

NOTES:
1. (2) SPAN MINIMUM, (3) PREFERRED.
2. AT SUPPORTS PARALLEL TO CORRUGATIONS - PROVIDE PUDDLE WELDS AT 24" ON CENTER MAXIMUM.
3. "SHEARED SIDE LAP" CONNECTION REFERS TO "PUNCHLOK" BY VERCO DECKING, INC. OR "DELTAGRIP" BY ASC STEEL DECK, OR PRE-APPROVED EQUAL.
4. MINIMUM DECK PROPERTIES AND WELD PATTERN SHOWN. PROVIDE HEAVIER GAUGE AND/OR WELD PATTERN AS REQUIRED TO DEVELOP DIAPHRAGM SHEARS.

TYPICAL ROOF METAL DECK
1 S7.01 DETAIL
NO SCALE

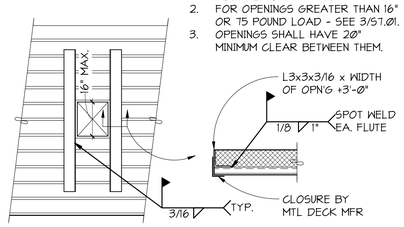

NOTES:
1. OPENINGS LESS THAN 6"x6" REQUIRE NO FRAMING.
2. FOR OPENINGS GREATER THAN 16" OR 75 POUND LOAD - SEE 3/S7.01.
3. OPENINGS SHALL HAVE 20" MINIMUM CLEAR BETWEEN THEM.

TYPICAL AT ISOLATED OPENINGS IN NON-COMPOSITE METAL DECK LESS THAN 16" SQUARE
2 S7.01 DETAIL
NO SCALE

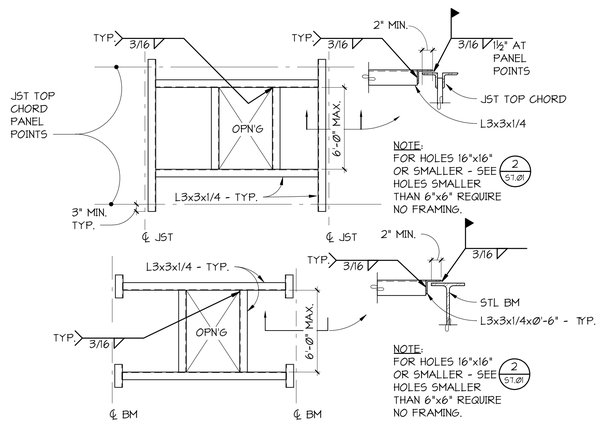

TYPICAL FRAMING AT OPENINGS IN METAL ROOF DECK (MAXIMUM LOAD = 600 POUNDS)
3 S7.01 DETAIL
NO SCALE

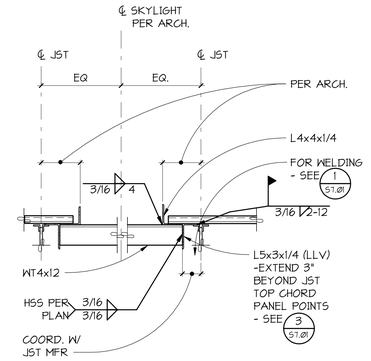

STEEL FRAMING AT SKYLIGHT
4 S7.01 SECTION
1" = 1'-0"

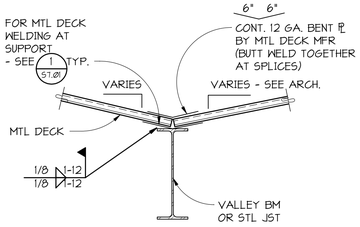

TYPICAL CONNECTION OF METAL DECK AT VALLEY
5 S7.01 SECTION
1" = 1'-0"

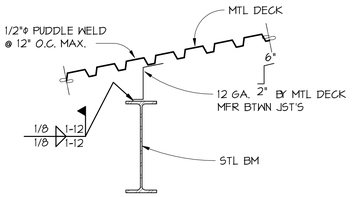

METAL DECK TO STEEL BEAM (COLLECTOR)
6 S7.01 SECTION
1" = 1'-0"

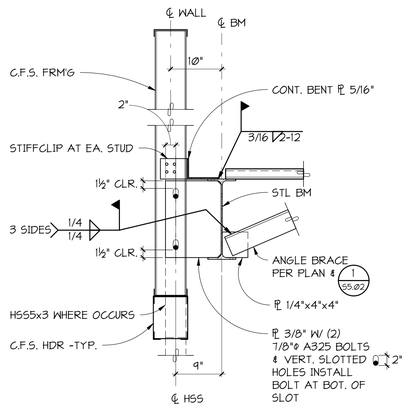

7 S7.01 SECTION
1" = 1'-0"

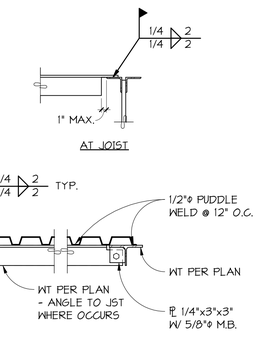

8 S7.01 SECTION
1" = 1'-0"

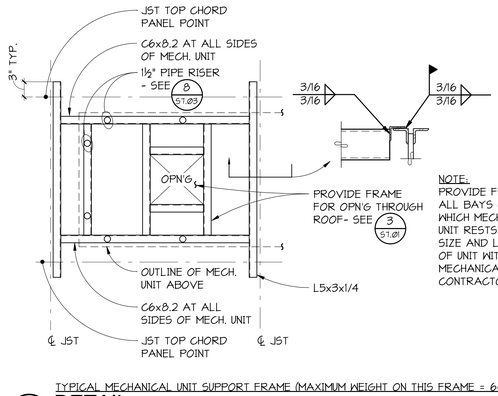

NOTE:
PROVIDE FRAMES IN ALL BAYS OVER WHICH MECHANICAL UNIT RESTS. VERIFY SIZE AND LOCATION OF UNIT WITH MECHANICAL CONTRACTOR.

TYPICAL MECHANICAL UNIT SUPPORT FRAME (MAXIMUM WEIGHT ON THIS FRAME = 6000 POUNDS)
9 S7.01 DETAIL
1" = 1'-0"

RISER SUPPORT FOR MECHANICAL UNIT FRAME
10 S7.01 DETAIL
1" = 1'-0"

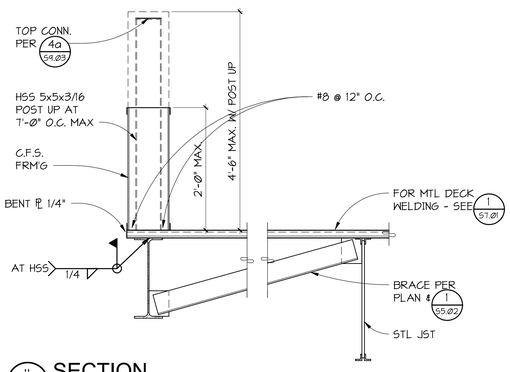

11 S7.01 SECTION
1" = 1'-0"

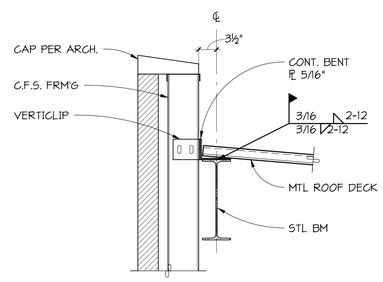

12 S7.01 SECTION
1" = 1'-0"

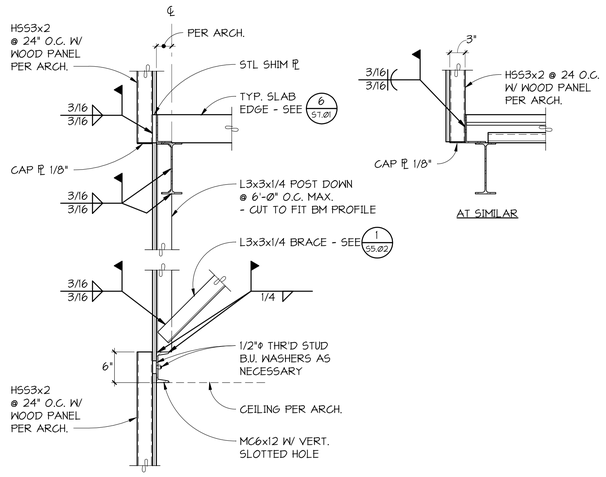

13 S7.01 SECTION
1" = 1'-0"

REVISIONS

CONFORMED SET

WESTERN STATE HOSPITAL
BUILDING 22, PATIENT SUPPORT CENTER
PATIENT SUPPORT CENTER
9601 STEILACOOM BLVD SW, LAKEWOOD, WASHINGTON 98498-7213

PCS Structural Solutions
Seattle | Tacoma | Portland
www.pcs-structural.com

NAC ARCHITECTURE
nacarchitecture.com
2025 FIRST AVE | SUITE 200
SEATTLE WA 98121
P.206.441.4322

© 2018 NAC Inc

DSHS NO	16-410G (2-1)
NAC NO	121-16004
DRAWN	DMY
CHECKED	BLC
DATE	03/16/2018

ROOF FRAMING DETAILS

S7.01

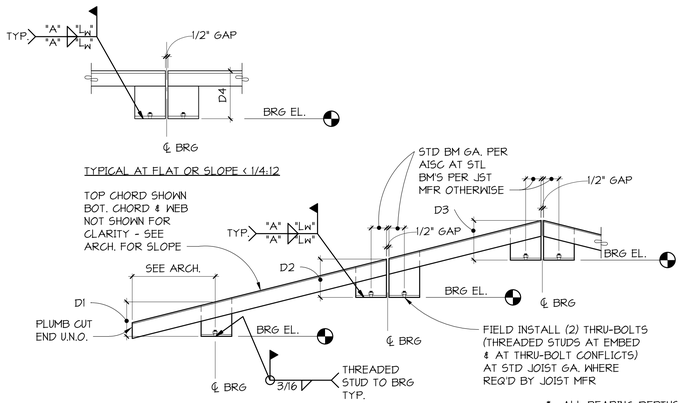

JOIST TYPE	BEARING DEPTH				FIELD INSTALLED BOLT SIZE	WELD SIZE "A"	WELD LENGTH "LW"	BOLT TYPE
	D1	D2	D3	D4				
"K"	6"	6"	6"	6"	1/2"ø	1/8"	2½"	1/2"ø A30T
"LH"	6"	6"	6"	6"	3/4"ø	1/4"	3"	3/4"ø A30T

- ALL BEARING DEPTHS MEASURED FROM CENTER LINE OF BEARING
- JOIST MANUFACTURER/SUPPLIER OFFSET JOIST IF REQUIRED TO ACHIEVE MINIMUM BEARING
- THRU-BOLT LOCATIONS SHALL BE SHOWN ON STEEL SHOP DRAWINGS

TYPICAL JOIST BEARING

1 / S1.02 DETAIL
1" = 1'-0"

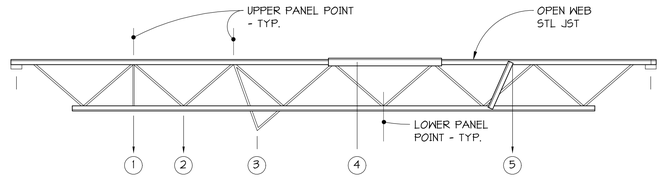

① HANG WITHIN 3" OF ANY UPPER PANEL POINT FOR "K" SERIES JOIST, 6" FOR "LH" SERIES.
② HANG WITHIN 3" OF ANY LOWER PANEL POINT FOR "K" SERIES JOIST, 6" FOR "LH" SERIES.
③ TRAPEZE BETWEEN ANY PANEL POINTS.
④ REINFORCE TOP CHORD - AS REQUIRED BY JOIST MANUFACTURER.
⑤ REINFORCE BETWEEN LOAD LOCATION AND LOWER CHORD PANEL POINT - AS REQUIRED BY JOIST MANUFACTURER.

NOTES:
1. JOIST MANUFACTURER DESIGN JOIST FOR 30Ø# ADLOAD.
2. THE MAXIMUM ALLOWABLE TOTAL LOAD THAT MAY BE ADDED TO ANY ONE JOIST = 1ØØØ#.
3. SINGLE LOADS LESS THAN 1ØØ# MAY BE ADDED ANYWHERE ALONG THE UPPER CHORD (NOT JUST AT PANEL POINTS) WITHOUT ADDING AN ANGLE TO STIFFEN THE JOIST.
4. DO NOT CUT OR DRILL THROUGH ANY JOIST MEMBER.
5. THIS DETAIL IS APPLICABLE TO HANGING MECHANICAL EQUIPMENT, SPRINKLER PIPES, ETC.
6. ALL STIFFENERS PER JOIST MANUFACTURER REQUIREMENTS PROVIDED BY THE GENERAL CONTRACTOR.

ALLOWABLE METHODS AND LOCATIONS FOR HANGING LOADS FROM OPEN WEB STEEL JOIST

2 / S1.02 DETAIL
1/2" = 1'-0"

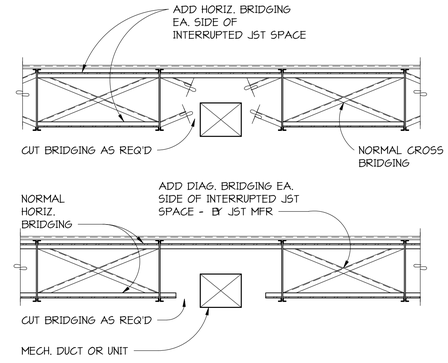

TYPICAL BRIDGING INTERRUPTED BY DUCT OR UNIT

3 / S1.02 DETAIL
1/2" = 1'-0"

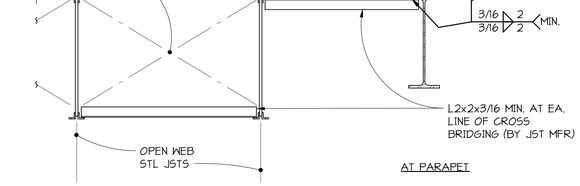

TYPICAL CROSS BRIDGING AT STEEL JOISTS

4 / S7.02 DETAIL
1" = 1'-0"

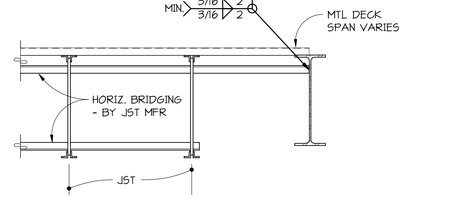

TYPICAL HORIZONTAL BRIDGING AT STEEL JOISTS

5 / S7.02 DETAIL
1" = 1'-0"

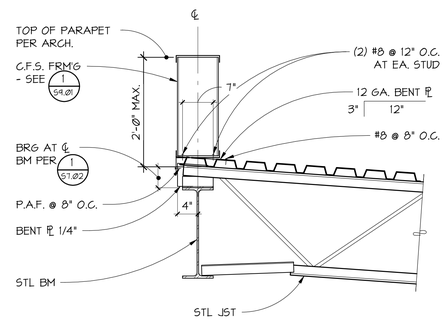

TYPICAL STEEL JOIST AT STEEL EAVE

6 / S7.02 SECTION
1" = 1'-0"

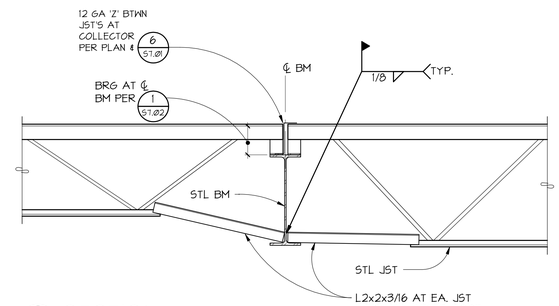

TYPICAL STEEL JOIST EACH SIDE OF BEAM

7 / S7.02 SECTION
1" = 1'-0"

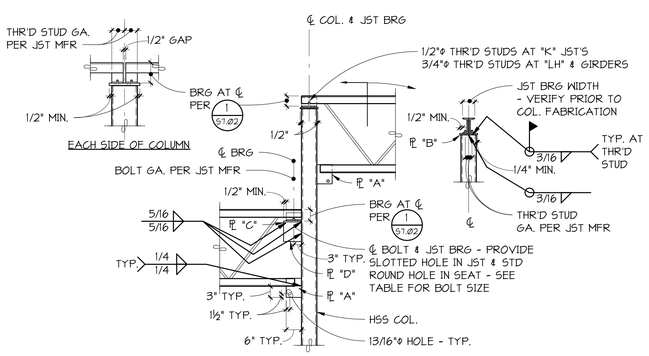

JOIST TYPE	BOLT SIZE & GRADE	ℙ "A" SIZE (CTR'D ON COL.)	ℙ "B" MIN. SIZE	ℙ "C" MIN. SIZE	ℙ "D" MIN. SIZE
K SERIES	1/2"ø A30T	ℙ 1/2"x6"xØ'-6"	ℙ 1/2"	ℙ 1/2"x6"	ℙ 1/2"x6"
LH SERIES	3/4"ø A30T	ℙ 3/4"x6"xØ'-1½"	ℙ 3/4"	ℙ 3/4"x6"	ℙ 1/2"x6"
JOIST GIRDER	3/4"ø A30T	ℙ 3/4"x6"xØ'-11½"	ℙ 1"	ℙ 1"x6"	(2) ℙ 3/4"x6" @ 6" O.C.

TYPICAL JOIST TO HOLLOW STRUCTURAL SECTION COLUMN CONNECTION

8 / S7.02 DETAIL
1/2" = 1'-0"

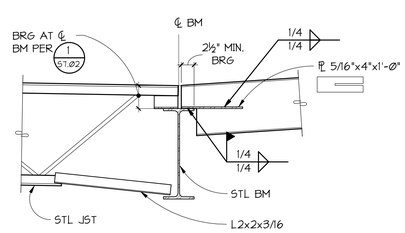

9 / S7.02 SECTION
1" = 1'-0"

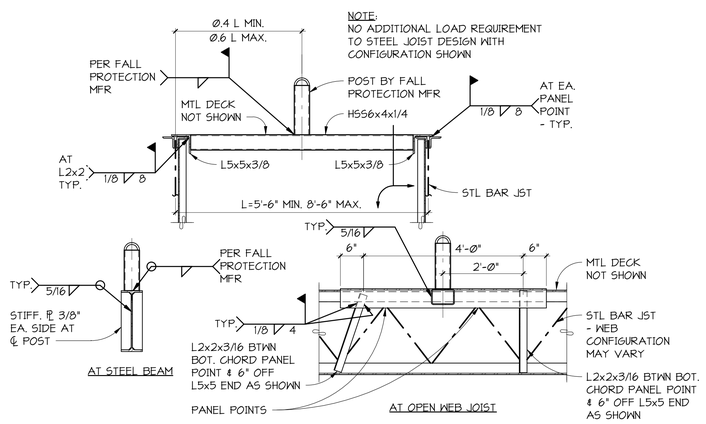

TYPICAL FALL PROTECTION SUPPORT

10 / S7.02 DETAIL
3/4" = 1'-0"

REVISIONS

CONFORMED SET

WESTERN STATE HOSPITAL
BUILDING 22, PATIENT SUPPORT CENTER
PATIENT SUPPORT CENTER
9601 STEILACOOM BLVD SW, LAKEWOOD, WASHINGTON 98498-7213

PCS Structural Solutions
Seattle | Tacoma | Portland
www.pcs-structural.com

NAC ARCHITECTURE
nacarchitecture.com
2025 FIRST AVE | SUITE 300
SEATTLE WA 98121
P:206.441.4522

DSHS NO	16-410G (2-1)
NAC NO	121-16004
DRAWN	DMY
CHECKED	BLC
DATE	03/16/2018

© 2018 NAC, Inc

ROOF FRAMING DETAILS

S7.02

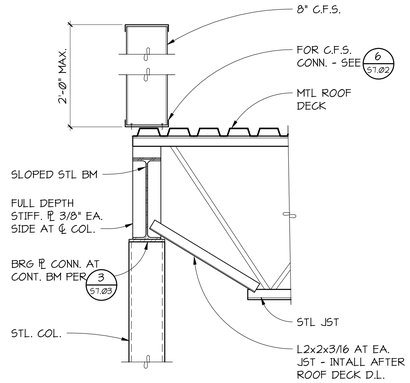

1/S7.03 SECTION
1" = 1'-0"

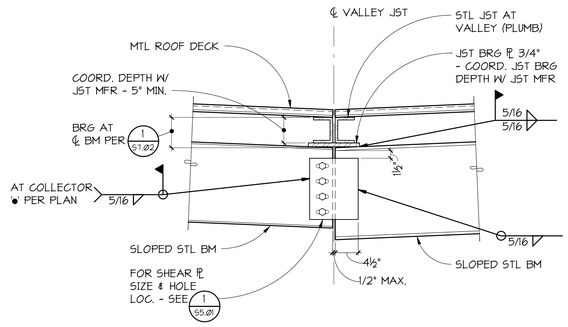

2/S7.03 SECTION
1" = 1'-0"

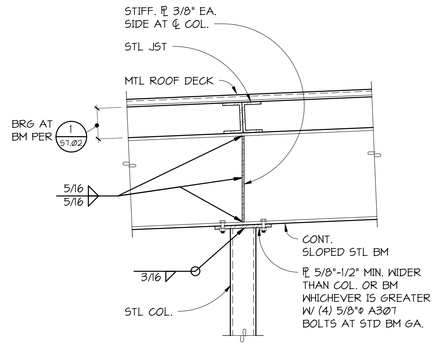

3/S7.03 SECTION
1" = 1'-0"

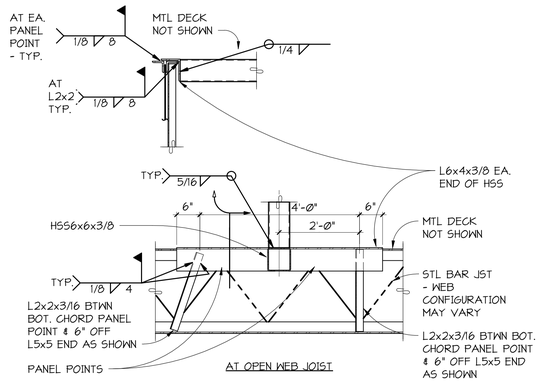

4/S7.03 DETAIL
3/4" = 1'-0"

5/S7.03 SECTION
1" = 1'-0"

6/S7.03 SECTION
1" = 1'-0"

REVISIONS

CONFORMED SET

WESTERN STATE HOSPITAL
BUILDING 22, PATIENT SUPPORT CENTER
PATIENT SUPPORT CENTER
9601 STEILACOOM BLVD SW, LAKEWOOD, WASHINGTON 98498-7213

PCS
Structural Solutions
Seattle | Tacoma | Portland
www.pcs-structural.com

NAC ARCHITECTURE
nacarchitecture.com
2025 FIRST AVE | SUITE 300
SEATTLE WA 98121
P:206.441.4522

© 2018 NAC, Inc

DSHS NO	16-410G (2-1)
NAC NO	121-16004
DRAWN	DMY
CHECKED	BLC
DATE	03/16/2018

ROOF FRAMING DETAILS

S7.03

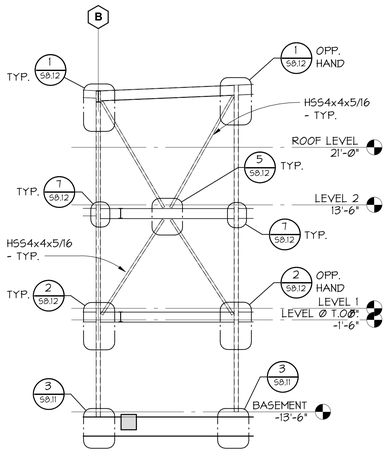

1 58.Ø1 **BF-1**
1/8" = 1'-Ø"

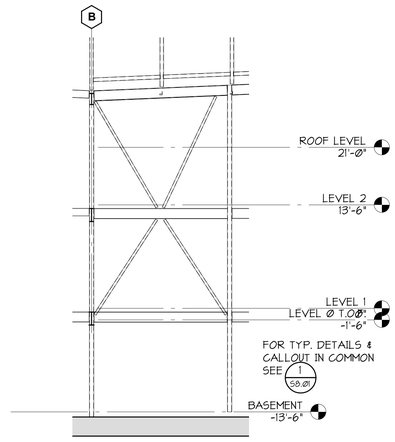

2 58.Ø1 **BF-2**
1/8" = 1'-Ø"

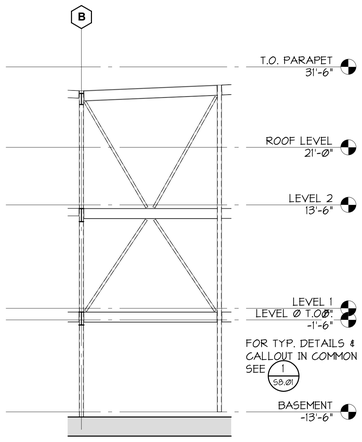

3 58.Ø1 **BF-3**
1/8" = 1'-Ø"

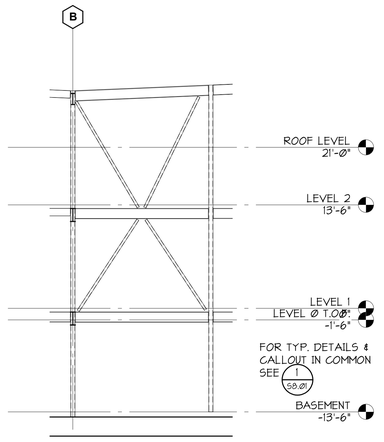

4 58.Ø1 **BF-4**
1/8" = 1'-Ø"

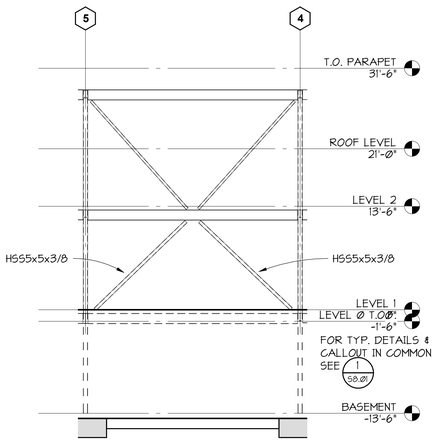

5 58.Ø1 **BF-5**
1/8" = 1'-Ø"

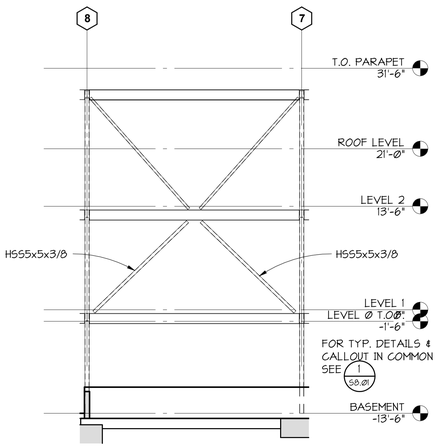

6 58.Ø1 **BF-6**
1/8" = 1'-Ø"

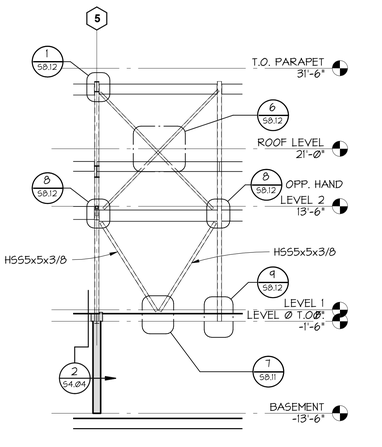

7 58.Ø1 **BF-7**
1/8" = 1'-Ø"

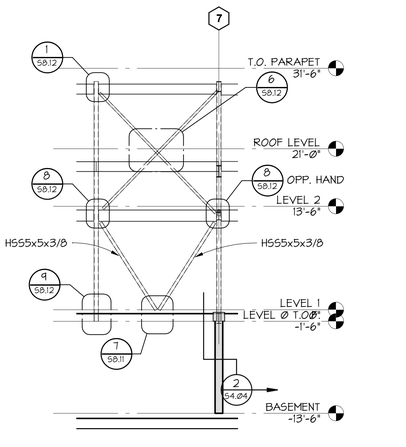

8 58.Ø1 **BF-8**
1/8" = 1'-Ø"

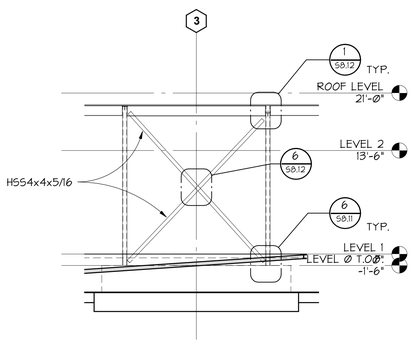

9 58.Ø1 **BF-9**
1/8" = 1'-Ø"

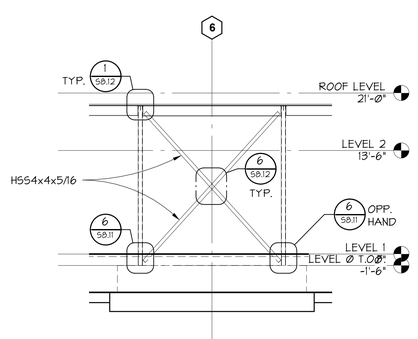

10 58.Ø1 **BF-10**
1/8" = 1'-Ø"

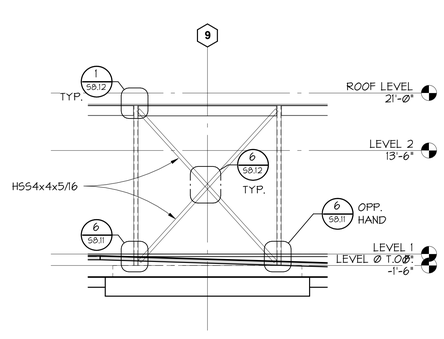

11 58.Ø1 **BF-11**
1/8" = 1'-Ø"

ALL BRACES
HSS4x4x5/16 U.N.O.

NOTES:

1. SEE PLANS FOR COLUMN AND BEAM SIZES. ALL COLUMNS ARE CONTINUOUS UNLESS NOTED OTHERWISE.
2. ALL WELDS ON BRACED FRAMES SHALL MEET LATERAL FRAME REQUIREMENTS - SEE GENERAL NOTES.
3. ALL BRACE GUSSET PLATES SHALL HAVE RIGID INSULATION AT CONCRETE SLABS PER 1/58.11.
4. FOR TYPICAL ANCHORAGE INTO FOOTINGS - SEE 3/58.11.
5. ALL BRACE CONNECTIONS TO GUSSET PLATES SHALL HAVE COVER PLATES PER 4/58.11.
6. DESIGN INTENT IS FOR BRACES TO BE INSTALLED BEFORE CONCRETE FLOORS ARE POURED. ALL WELDS BETWEEN BRACES AND GUSSETS TO BE PLACED PRIOR TO CONCRETE POURS.
7. SEE ARCHITECT FOR FURRING REQUIREMENTS AT FRAMES. WELDING AND/OR SHOOTING POWDER DRIVEN FASTNERS ONTO PORTIONS OF BRACES OR GUSSETS IS NOT ALLOWED - SEE 2/58.11.
8. IDENTIFY IN THE SHOP DRAWINGS ALL STRUCTURAL STEEL MEMBERS, AND FIELD AND SHOP WELDS THAT ARE DESIGNATED PART OF THE LATERAL FRAME.
9. FABRICATED SHOP DRAWINGS SHALL PROVIDE AN ELEVATION FOR EACH GUSSET PLATE SHOWING ALL DIMENSIONS NOTED ON 5/58.11

12 58.Ø1 **BRACED FRAME NOTES**
NO SCALE

REVISIONS

CONFORMED SET

WESTERN STATE HOSPITAL
BUILDING 22, PATIENT SUPPORT CENTER
PATIENT SUPPORT CENTER
9601 STEILACOOM BLVD SW, LAKEWOOD, WASHINGTON 98498-7213

PCS Structural Solutions
Seattle | Tacoma | Portland
www.pcs-structural.com

NAC ARCHITECTURE
nacarchitecture.com
2026 FIRST AVE | SUITE 300
SEATTLE WA 98121
P:206.441.4522

© 2016 NAC Inc

DSHS NO	16-410G (2-1)
NAC NO	121-16004
DRAWN	DMY
CHECKED	BLC
DATE	03/16/2018

STEEL BRACED FRAME ELEVATIONS

S8.01

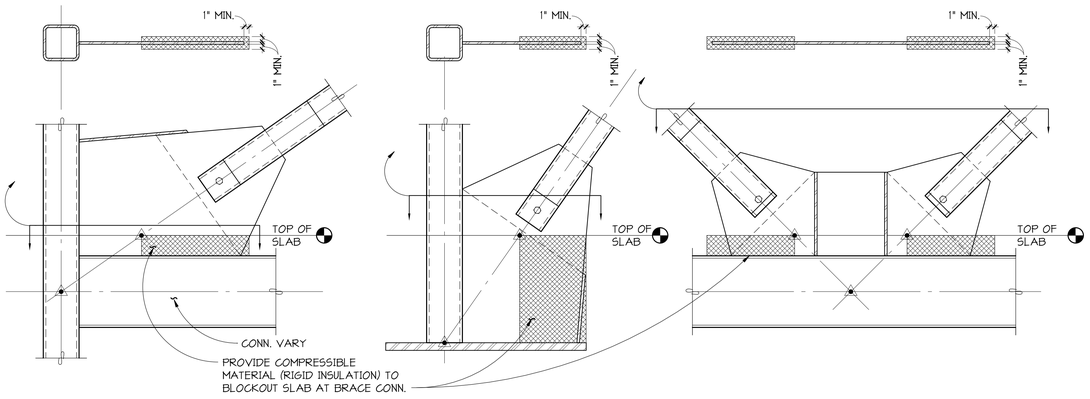

TYPICAL FLOOR SLAB BLOCKOUT AT BRACE CONNECTION | TYPICAL FOUNDATION SLAB BLOCKOUT AT BRACE CONNECTION | TYPICAL FLOOR SLAB BLOCKOUT AT BRACE CONNECTION

1 DETAIL
5/8.11 NO SCALE

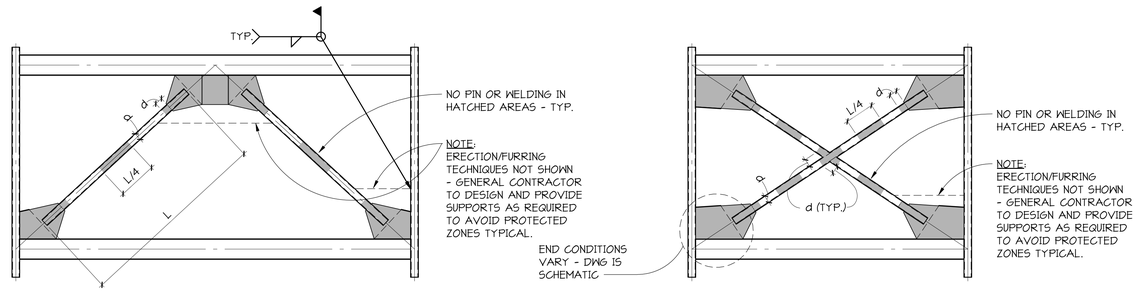

PROTECTED ZONE OF INVERTED-V BRACED FRAME | PROTECTED ZONE OF X-BRACED FRAME

2 SECTION
5/8.11 NO SCALE

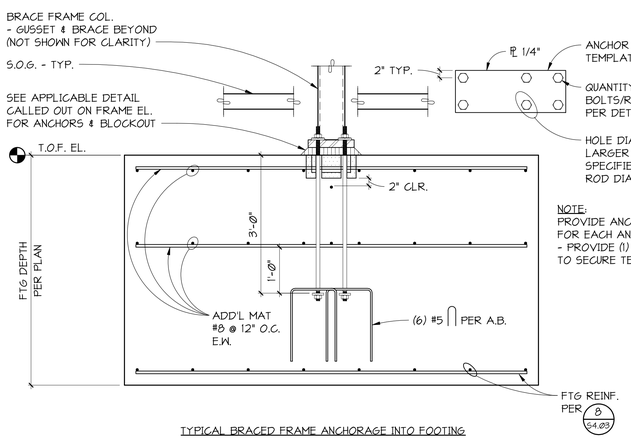

TYPICAL BRACED FRAME ANCHORAGE INTO FOOTING

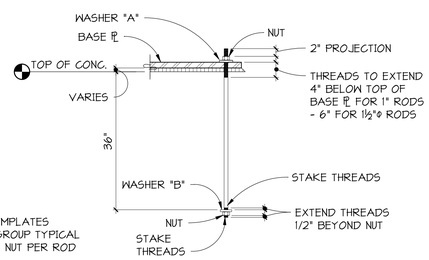

NOTE:
PROVIDE ANCHOR ROD TEMPLATES FOR EACH ANCHOR ROD GROUP TYPICAL - PROVIDE (1) ADDITIONAL NUT PER ROD TO SECURE TEMPLATE.

ANCHOR ROD		WASHER		NUT
SIZE	MATERIAL	TYPE	SIZE	
1½"ø	F1554 GRADE 55	A	℄ 1/2"x3½"xØ-3½" W/ 1⅝"ø HOLE CTR'D	A563 GRADE DH HEAVY HEX
		B	ASTM F844 CARBON FLAT WASHER	

TYPICAL ANCHOR ROD/BOLT DETAIL AT BRACED FRAMES

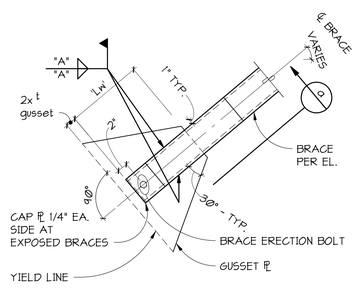

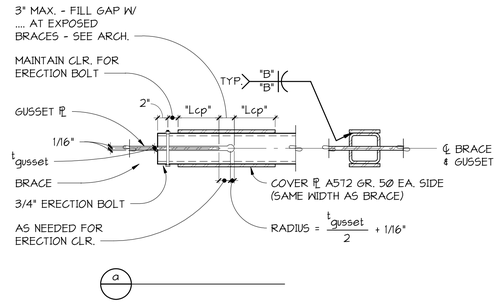

SCHEDULE						
BRACE SIZE	t_{gusset} (in)	"L₩" (in)	WELD "A"	$t_{COVER\ ℄}$ (in)	'L℄p" (in)	WELD "B"
HSS 4x4x5/16	3/4"	16"	1/4"	5/16"	12"	1/4
HSS 5x5x3/8	1"	16"	5/16"	3/8"	12"	5/16

PIPE BRACE TO GUSSET PLATE CONNECTION

3 SECTION
5/8.11 NO SCALE

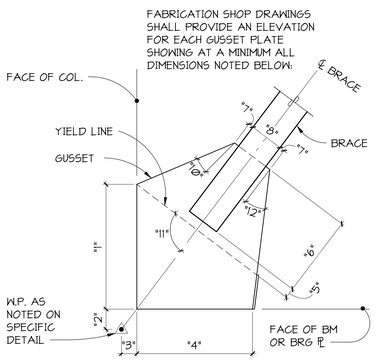

5 DETAIL
5/8.11 1" = 1'-Ø"

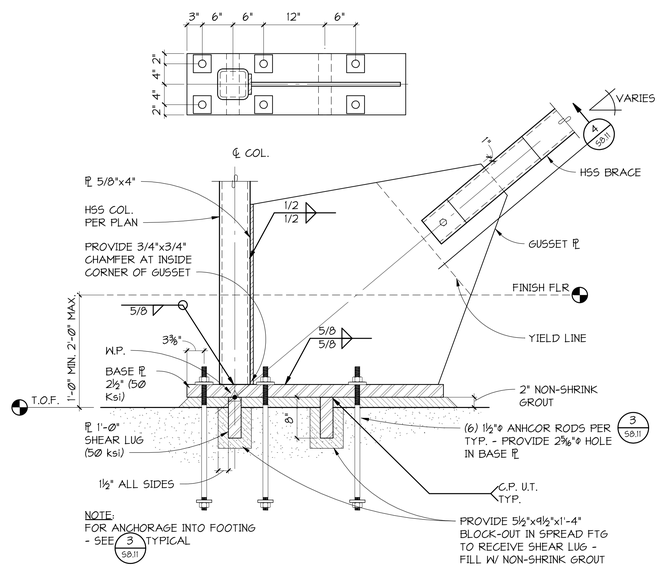

TYPICAL BASE PLATE AT BRACED FRAME

6 SECTION
5/8.11 NO SCALE

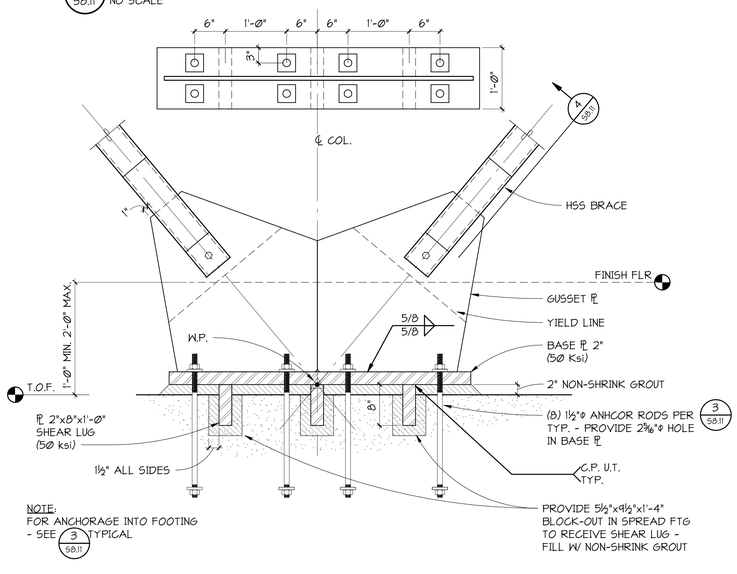

TYPICAL BASE PLATE AT BRACED FRAME

7 SECTION
5/8.11 1" = 1'-Ø"

REVISIONS

CONFORMED SET

WESTERN STATE HOSPITAL
BUILDING 22, PATIENT SUPPORT CENTER
PATIENT SUPPORT CENTER
9601 STEILACOOM BLVD SW, LAKEWOOD, WASHINGTON 98498-7213

PCS Structural Solutions
Seattle | Tacoma | Portland
www.pcs-structural.com

NAC ARCHITECTURE
nacarchitecture.com
2025 FIRST AVE | SUITE 300
SEATTLE WA 98121
P.206.441.4322

DSHS NO	16-410G (2-1)
NAC NO	121-16004
DRAWN	DMY
CHECKED	BLC
DATE	03/16/2018

© 2018 NAC Inc

STEEL BRACED FRAME DETAILS

S8.11

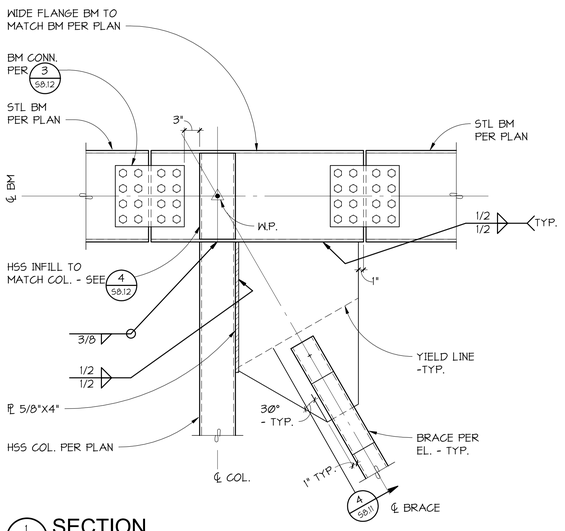

1 S8.12 **SECTION**
NO SCALE

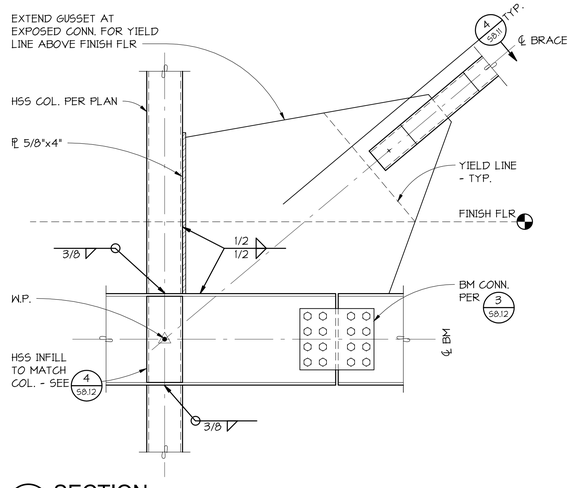

2 S8.12 **SECTION**
NO SCALE

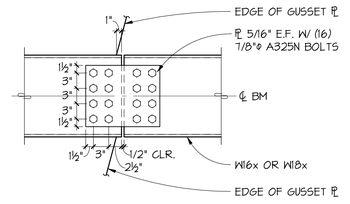

3 S8.12 **DETAIL**
NO SCALE

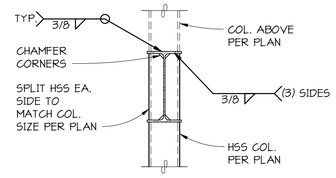

4 S8.12 **SECTION**
NO SCALE

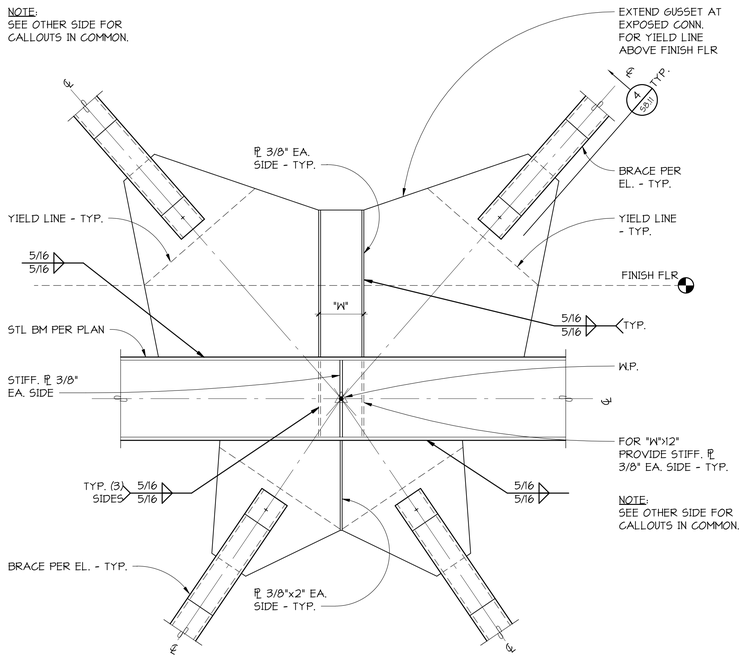

TYPICAL AT SIMILAR BRACE ANGLES

5 S8.12 **SECTION**
NO SCALE

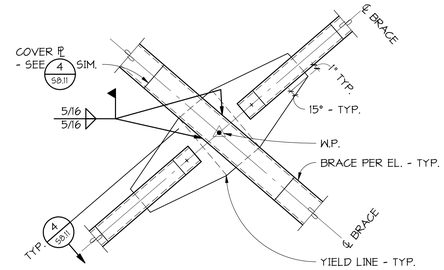

6 S8.12 **SECTION**
NO SCALE

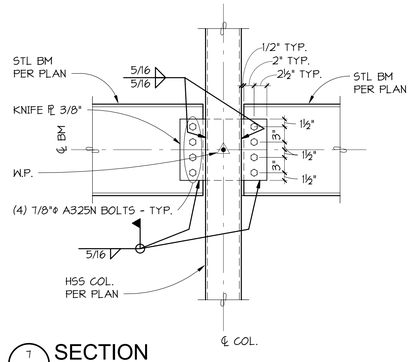

7 S8.12 **SECTION**
NO SCALE

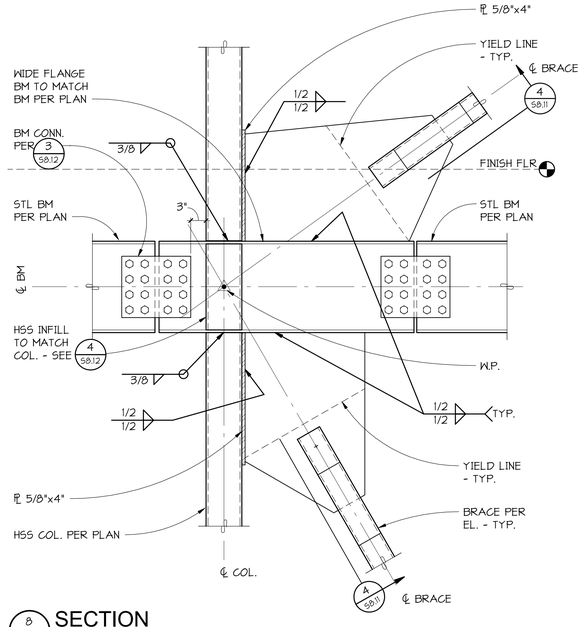

8 S8.12 **SECTION**
1" = 1'-0"

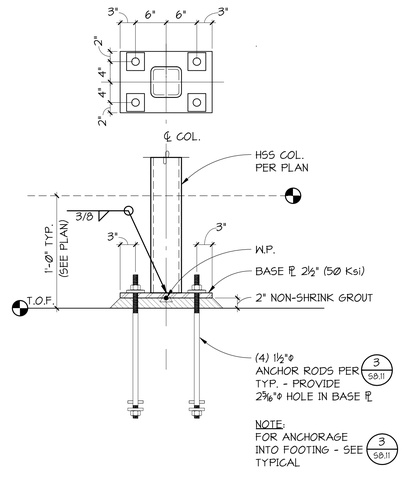

TYPICAL BASE PLATE AT BRACED FRAME

9 S8.12 **SECTION**
1" = 1'-0"

REVISIONS

CONFORMED SET

WESTERN STATE HOSPITAL
BUILDING 22, PATIENT SUPPORT CENTER
PATIENT SUPPORT CENTER
9601 STEILACOOM BLVD SW, LAKEWOOD, WASHINGTON 98498-7213

PCS Structural Solutions
Seattle | Tacoma | Portland
www.pcs-structural.com

NAC ARCHITECTURE
nacarchitecture.com
2025 FIRST AVE | SUITE 300
SEATTLE WA 98121
P:206.441.4522

© 2018 NAC INC

DSHS NO	16-410G (2-1)
NAC NO	121-16004
DRAWN	DMY
CHECKED	BLC
DATE	03/16/2018

STEEL BRACED FRAME DETAILS

S8.12

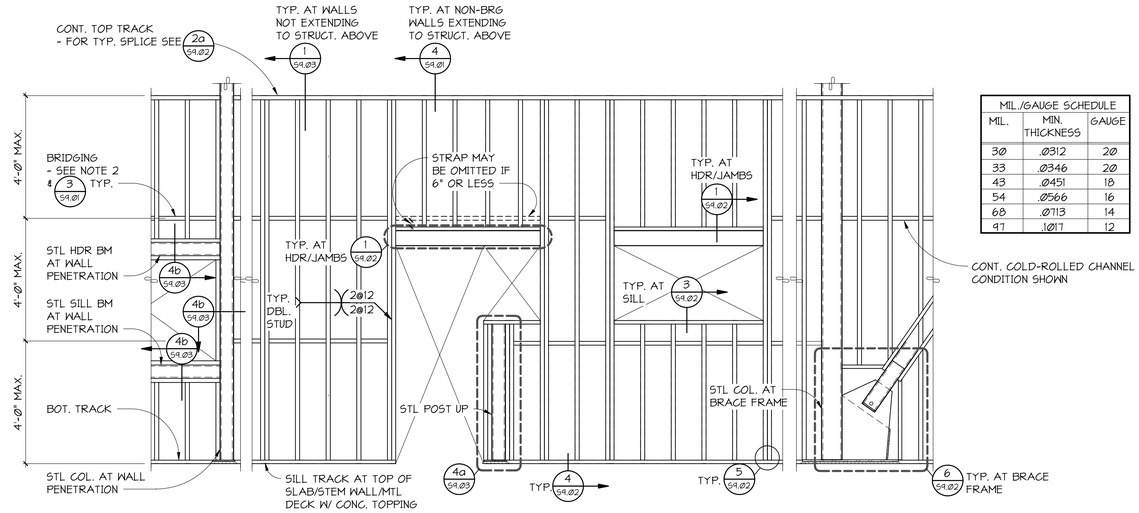

MIL./GAUGE SCHEDULE		
MIL.	MIN. THICKNESS	GAUGE
30	.0312	20
33	.0346	20
43	.0451	18
54	.0566	16
68	.0713	14
97	.1017	12

COLD-FORMED STEEL STUD WALL FRAMING NOTES:

1. ALL NON-BEARING WALL STUDS SHALL BE PER 2/S9.01 UNLESS NOTED OTHERWISE. FOR WALL TYPE AND PROPER LOCATION SEE ARCHITECTURAL DRAWINGS.
2. PROVIDE BRIDGING AT ALL NON-BEARING WALLS WITHOUT FULL HEIGHT QUALIFIED SHEATHING EITHER SIDE OF STUD PER 3/S9.01 NOTE #1.
3. FOR TYPICAL COLD-FORMED STEEL JOIST CEILING FRAMING SCHEDULE AND DETAIL - SEE 5/S9.03.
4. ALL WELDS SHALL BE 1/8" FILLET MAXIMUM. FOR MATERIALS THINNER THAN 0.15", EFFECTIVE THROAT SHALL NOT BE LESS THAN THINNEST MATERIAL. WELD IN ACCORDANCE WITH "STRUCTURAL WELDING CODE -- SHEET METAL" AWS D1.3.
5. STUD PUNCHOUTS SHALL NOT BE SPACED LESS THAN 24" ON CENTER NOR WITHIN 10" CLEAR OF MEMBER END AT STUDS, HEADERS, BEAMS, JOISTS, ETC. FOR TYPICAL ALLOWABLE PUNCHOUT DETAIL - SEE T/S9.02.
6. SCREWS SHALL BE THREAD-FORMING OR THREAD-CUTTING, WITH OR WITHOUT A SELF DRILLING POINT. SCREWS SHALL BE INSTALLED AND TIGHTENED IN ACCORDANCE WITH THE MANUFACTURER'S RECOMMENDATION. MINIMUM SPACING IS THREE SCREW DIAMETERS, A MINIMUM OF (3) THREADS SHALL BE ENGAGED.
7. FOR TYPICAL COLD-FORMED STEEL WALL CORNER REQUIREMENTS - SEE 2b/S9.02.
8. FOR POWDER ACTUATED FASTENER REQUIREMENTS - SEE GENERAL NOTES.
9. TYPICAL 54 MIL. BENT PLATE AT ALL GLAZING OPENINGS U.N.O. - SEE 3b/S9.02.

1 S9.01 DETAIL
TYPICAL NON-BEARING COLD-FORMED STEEL STUD WALL FRAMING
1/2" = 1'-0"

EXTERIOR NON-BEARING C.F.S. WALL STUDS W/ MASONRY VENEER 15 P.S.F. LIVE LOAD - L/600 DEFLECTION LIMIT					
REQ'D BRIDGING TYPE	STUD SIZE	STUD MIL.			
		33MIL.	43MIL.	54MIL.	68MIL.
		STUDS SPACED @ 16" O.C. MAX.			
		MAX. STUD HT ALLOWED			
1 OR 2 OR 3	400S137	SEE NOTE #3	10'-0"	10'-9"	11'-6"
	400S162		10'-6"	11'-3"	12'-1"
	400S200		11'-1"	11'-11"	12'-9"
	600S137		13'-10"	14'-10"	15'-11"
	600S162		14'-5"	15'-6"	16'-7"
	600S200		15'-2"	16'-3"	17'-6"
1 OR 3	800S137		17'-6"	18'-10"	20'-2"
	800S162		18'-2"	19'-7"	21'-0"
	800S200		19'-1"	20'-6"	22'-0"

EXTERIOR NON-BEARING C.F.S. WALL STUDS 15 P.S.F. LIVE LOAD - L/360 DEFLECTION LIMIT					
REQ'D BRIDGING TYPE	STUD SIZE	STUD MIL.			
		33MIL.	43MIL.	54MIL.	68MIL.
		STUDS SPACED @ 16" O.C. MAX.			
		MAX. STUD HT ALLOWED			
1 OR 2 OR 3	400S137	10'-11"	11'-11"	12'-9"	13'-7"
	400S162	11'-5"	12'-5"	13'-4"	14'-3"
	400S200	12'-0"	13'-2"	14'-1"	15'-1"
	600S137	15'-1"	16'-5"	17'-7"	18'-10"
	600S162	15'-9"	17'-2"	18'-5"	19'-8"
	600S200	16'-6"	18'-0"	19'-4"	20'-9"
1 OR 3	800S137	-	20'-9"	22'-4"	23'-11"
	800S162	-	21'-7"	23'-2"	24'-11"
	800S200	-	22'-7"	24'-3"	26'-1"

INTERIOR NON-BEARING C.F.S. WALL STUDS 5 P.S.F. LIVE LOAD - L/360 DEFLECTION LIMIT			
REQ'D BRIDGING TYPE	STUD SIZE	STUD MIL.	
		18MIL.	33MIL.
		STUD SPACING	
		16" O.C.	16" O.C.
		MAX. STUD HT ALLOWED	
4	162S125	8'-2"	8'-5"
	250S125	9'-10"	11'-2"
	362S125	12'-4"	14'-3"
	400S125	13'-4"	15'-11"
	600S125	17'-11"	21'-4"
REQ'D BRIDGING TYPE	STUD SIZE	STUD MIL.	
		43MIL.	54MIL.
		STUD SPACING	
		16" O.C.	16" O.C.
		MAX. STUD HT ALLOWED	
1 OR 2 OR 3 OR 4	400S137	17'-2"	18'-5"
	400S162	18'-0"	19'-3"
	400S200	19'-0"	20'-4"
	600S137	23'-8"	25'-5"
	600S162	24'-9"	26'-6"
	600S200	26'-0"	27'-11"
1 OR 3 OR 4	800S137	30'-0"	32'-2"
	800S162	31'-2"	33'-6"
	800S200	32'-7"	35'-0"

NOTES:
1. FOR TYPICAL COLD-FORMED STEEL WALL STUD BRIDGING DETAIL - SEE 3/S9.01.
2. INFORMATION SHOWN FOR S125 STUDS TAKEN FROM THE GYPSUM CONSTRUCTION HAND BOOK BY CGC INC. - INFORMATION SHOWN FOR ALL OTHER STUDS TAKEN FROM ICC ES LEGACY REPORT ER-4943P*.
3. 43MIL. MINIMUM REQUIRED AT MASONRY VENEER.

2 S9.01 SCHEDULE
NO SCALE

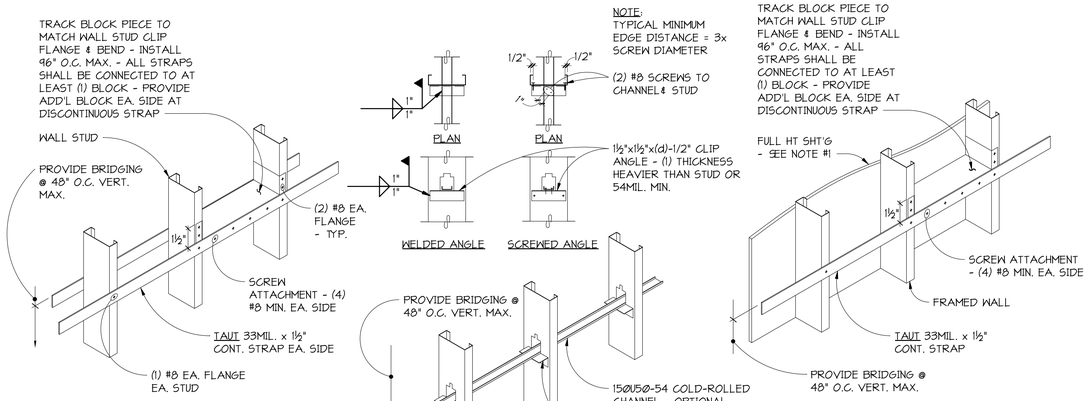

OPTION 1: BRIDGING CONSISTS OF DOUBLE FLAT STRAP WITH BLOCKING

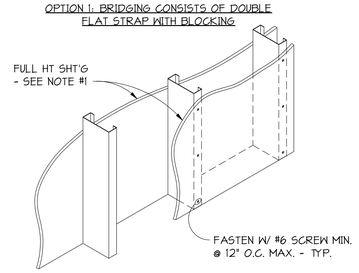

OPTION 4: FULL HEIGHT SHEATHING EACH FACE

NOTE: TYPICAL MINIMUM EDGE DISTANCE = 3x SCREW DIAMETER

OPTION 2: BRIDGING CONSISTS OF COLD-ROLLED CHANNEL WITH CLIP ANGLE (6" MAX. STUD SIZE)

OPTION 3: BRIDGING CONSISTS OF SINGLE FLAT STRAP WITH BLOCK AND FULL HEIGHT SHEATHING OPPOSITE FACE

NOTES:
1. QUALIFIED SHEATHING SHALL BE GYPSUM WALL BOARD, GYPSHEATHING, PLYWOOD, OR ORIENTED STRAND BOARD ONLY AND SHALL OCCUR FULL HEIGHT OF WALL.

3 S9.01 DETAIL
TYPICAL BRIDGING AT NON-BEARING WALL
1" = 1'-0"

SLOTTED TOP TRACK GAGE		
EXTERIOR NON-BEARING WALL		
MAX. WALL HEIGHT*	MIL.	ALLOW LOAD
10'-4"	33	138
12'-3"	43	163
23'-2"	54	300
25'-8"	68	342
INTERIOR NON-BEARING WALL		
25'-0"	33	138

*DISTANCE BETWEEN WALL STUD SUPPORTS

VERTI-CLIP	ALLOW LOAD
SL362	790#
SL600	1680#
SL800	1870#

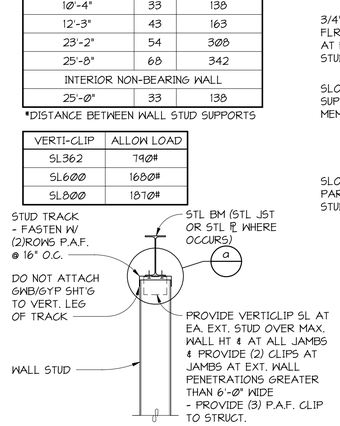

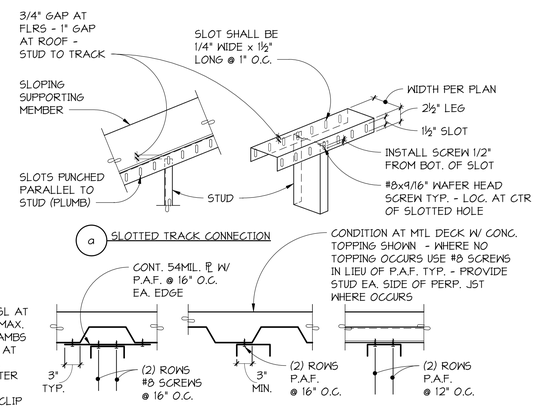

4 S9.01 SECTION
TYPICAL NON-BEARING WALL EXTENDING TO STRUCTURE ABOVE
1" = 1'-0"

REVISIONS

CONFORMED SET

WESTERN STATE HOSPITAL
BUILDING 22, PATIENT SUPPORT CENTER
PATIENT SUPPORT CENTER
9601 STEILACOOM BLVD SW, LAKEWOOD, WASHINGTON 98498-7213

PCS Structural Solutions
Seattle | Tacoma | Portland
www.pcs-structural.com

NAC ARCHITECTURE
nacarchitecture.com
2025 FIRST AVE | SUITE 300
SEATTLE WA 98121
P:206.441.4522

DSHS NO	16-410G (2-1)
NAC NO	121-16004
DRAWN	DMY
CHECKED	BLC
DATE	03/16/2018

© 2016 NAC Inc

COLD FORMED STEEL FRAMING DETAILS

S9.01

EXTERIOR NON-BEARING C.F.S. STUD WALL PENETRATION JAMB SCHEDULE 15 P.S.F. LIVE LOAD									
STUD SIZE & MIL	MAX. PENETRATION (FT)	MIN. NUMBER STUD(S) AT JAMB							
		(1)		(2)		(3)		(4)	
		HORIZ. DEFLECTION LIMIT OF WALL HT							
		1 / 360	1 / 600	1 / 360	1 / 600	1 / 360	1 / 600	1 / 360	1 / 600
		MAX. JAMB HT (FT)							
400S137-33	3	-	-	11	-	-	-	-	-
	4	-	-	10	-	12	-	-	-
	6	-	-	8	8	10	-	12	-
	8	-	-	-	-	9	-	11	-
600S137-33	3	10	10	15	14	16	16	-	-
	4	9	9	14	13	16	15	-	16
	6	-	-	11	11	15	14	-	15
	8	-	-	10	10	12	12	15	14
	10	-	-	9	9	11	11	13	13
	12	-	-	-	-	10	10	12	12
800S162-43	3	16	16	-	-	-	-	-	-
	4	14	14	16	16	-	-	-	-
	6	12	12	16	16	-	-	-	-
	8	10	10	16	16	-	-	-	-
	10	-	-	14	14	16	16	-	-
	12	-	-	13	13	16	16	-	-

INTERIOR NON-BEARING C.F.S. STUD WALL PENETRATION JAMB SCHEDULE 5 P.S.F. LIVE LOAD									
STUD SIZE & MIL	MAX. PENETRATION (FT)	MIN. NUMBER STUD(S) AT JAMB							
		(1)		(2)		(3)		(4)	
		HORIZ. DEFLECTION LIMIT OF WALL HT							
		1 / 360	1 / 600	1 / 360	1 / 600	1 / 360	1 / 600	1 / 360	1 / 600
		MAX. JAMB HT (FT)							
362S125-33 OR 400S125-33	3	9	9	14	12	16	13	-	15
	4	8	8	12	11	15	13	-	14
	6	-	-	11	10	13	11	15	13
	8	-	-	10	9	12	10	14	12
	10	-	-	8	8	11	10	13	11
600S125-33	3	12	12	16	16	-	-	-	-
	4	10	10	16	16	-	-	-	-
	6	-	-	15	15	16	16	-	-
	8	-	-	13	13	16	16	-	-
	10	-	-	11	11	15	15	16	16
	12	-	-	9	9	14	14	16	16

NOTES:
1. BOXED JAMB STUDS SHOWN. BACK-TO-BACK JAMB STUDS PERMITTED AT CONTRACTOR OPTION. FOR DETAIL - SEE 5/S9.02.
2. FOR CONNECTION TO STRUCTURE ABOVE - SEE 4/S9.01.
3. FOR CONNECTION TO STRUCTURE BELOW - SEE 5/S9.02.
4. HEADER AND STUDS SHALL BE CONTINUOUS - NO SPLICES ALLOWED.
5. 1/16Ø0 APPLIES TO WALLS WITH BRICK VENEER - COORDINATE WITH ARCH WALL TYPES.
6. TYPICAL 54 MIL. BENT PLATE AT ALL GALZING OPENINGS U.N.O. - SEE 3b/S9.02.

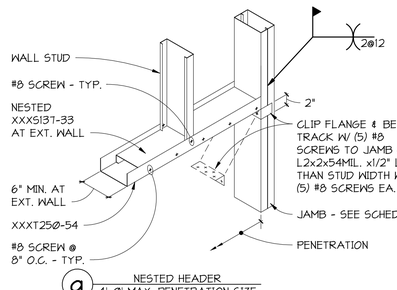

a NESTED HEADER
4'-Ø MAX. PENETRATION SIZE (NOT ALLOWED AT DOORS) (600S MIN. AT EXT.)

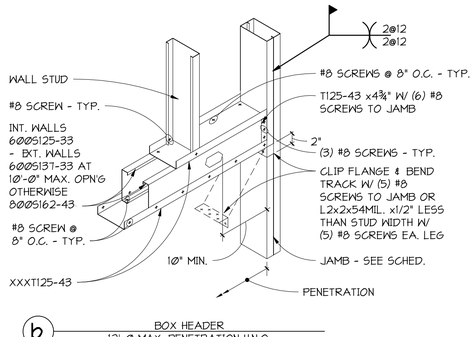

b BOX HEADER
12'-0 MAX. PENETRATION U.N.O.
8'-Ø MAX. PENETRATION AT 4" EXT. WALL
10'-0" MAX. PENETRATION AT 4" OR 3⅝" INT. WALL

TYPICAL NON-BEARING COLD-FORMED STEEL WALL PENETRATION AT 16'-Ø" MAXIMUM STUD HEIGHT

1/S9.02 DETAIL
NO SCALE

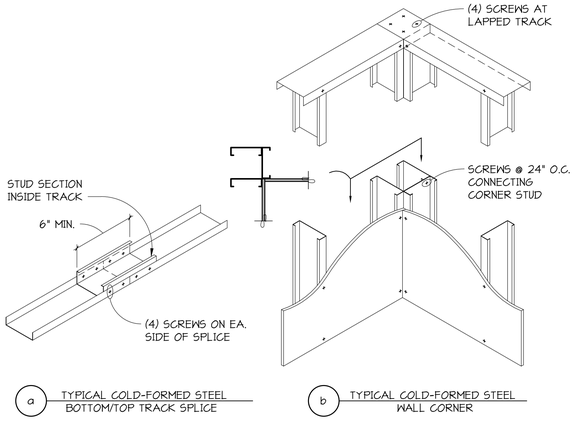

a TYPICAL COLD-FORMED STEEL BOTTOM/TOP TRACK SPLICE

b TYPICAL COLD-FORMED STEEL WALL CORNER

2/S9.02 DETAIL
1" = 1'-Ø"

NOTE:
PROVIDE LOAD BEARING SHIMS OR GROUT BETWEEN UNDERSIDE OF WALL BOTTOM TRACK OR RIM TRACK AND SUPPORT BELOW AT STUD OR JOIST LOCATION WHERE GAP GREATER THAN 1/4" OCCURS.

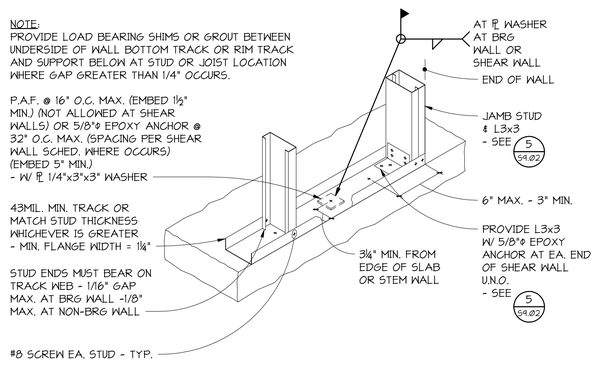

TYPICAL COLD-FORMED STEEL STUD AND TRACK ATTACHMENT

4/S9.02 DETAIL
1" = 1'-Ø"

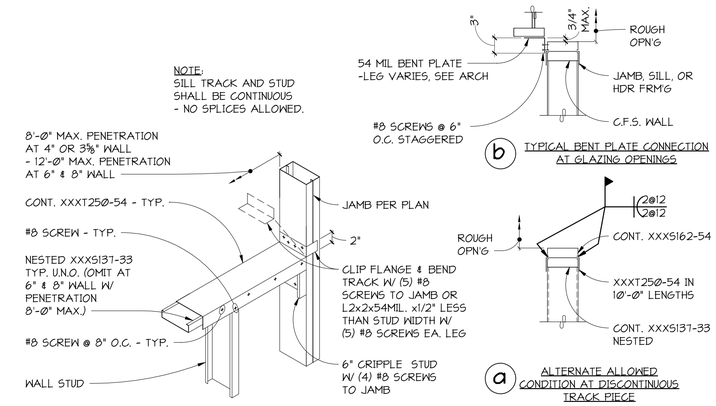

b TYPICAL BENT PLATE CONNECTION AT GLAZING OPENINGS

a ALTERNATE ALLOWED CONDITION AT DISCONTINUOUS TRACK PIECE

TYPICAL SILL AT COLD-FORMED STEEL WALL PENETRATION AT 16'-Ø" MAXIMUM STUD HEIGHT

3/S9.02 DETAIL
NO SCALE

NOTE:
PROVIDE LOAD BEARING SHIMS OR GROUT BETWEEN UNDERSIDE OF WALL BOTTOM TRACK OR RIM TRACK & SUPPORT BELOW AT STUD OR JOIST LOCATION WHERE GAP GREATER THAN 1/4" OCCURS.

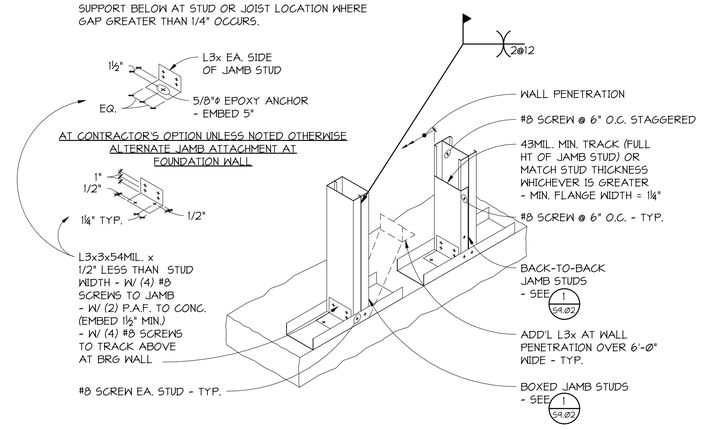

TYPICAL COLD-FORMED STEEL JAMB STUD ATTACHMENT

5/S9.02 DETAIL
1" = 1'-Ø"

NOTES:
1. DETAIL SHOWS TOP CONDITION - BASE SIMILAR.
2. FOR TYPICAL WALL FRAMING DETAILS - SEE 1/S9.Ø1.
3. NO POWDER ACTUATED FASTNERS OR SCREWS PERMITTED INTO BRACE.

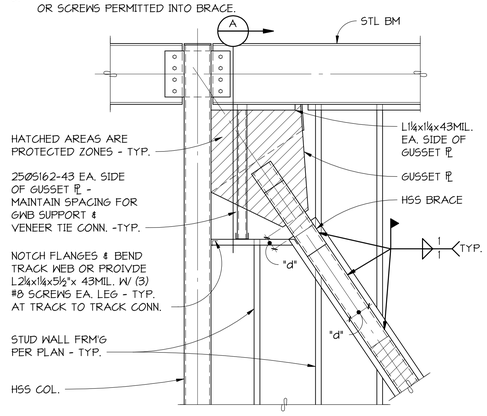

TYPICAL COLD-FORMED STEEL STUD FRAMING AT BRACED FRAME

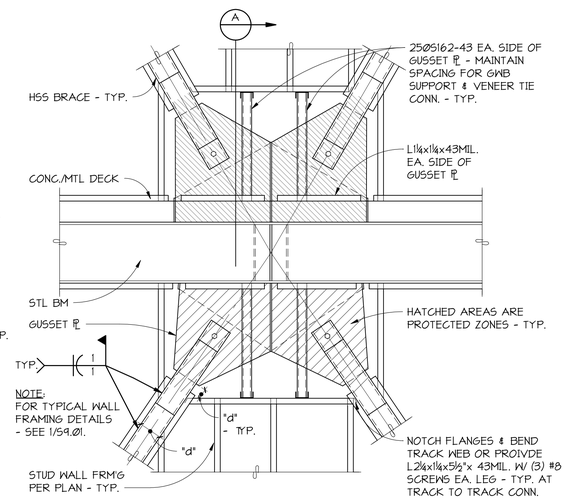

TYPICAL COLD-FORMED STEEL STUD FRAMING AT BRACED FRAME

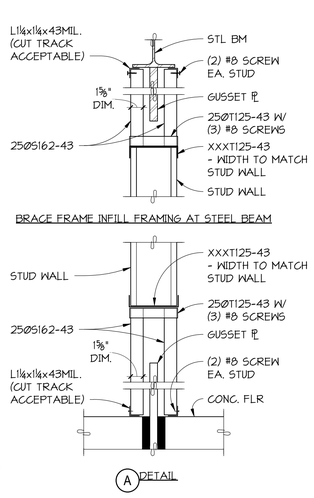

BRACE FRAME INFILL FRAMING AT FLOOR

6/S9.02 SECTION
NO SCALE

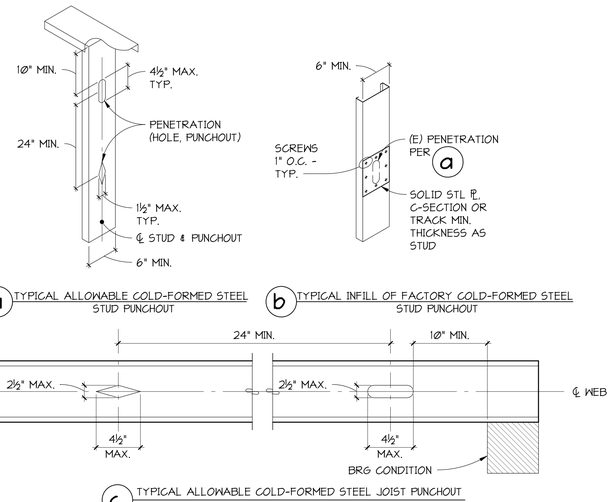

a TYPICAL ALLOWABLE COLD-FORMED STEEL STUD PUNCHOUT

b TYPICAL INFILL OF FACTORY COLD-FORMED STEEL STUD PUNCHOUT

c TYPICAL ALLOWABLE COLD-FORMED STEEL JOIST PUNCHOUT

7/S9.02 DETAIL
NO SCALE

REVISIONS

CONFORMED SET

WESTERN STATE HOSPITAL
BUILDING 22, PATIENT SUPPORT CENTER
PATIENT SUPPORT CENTER
9601 STEILACOOM BLVD SW, LAKEWOOD, WASHINGTON 98498-7213

PCS Structural Solutions
Seattle | Tacoma | Portland
www.pcs-structural.com

NAC ARCHITECTURE
nacarchitecture.com
2025 FIRST AVE | SUITE 300
SEATTLE WA 98121
P.206.441.4522

DSHS NO	16-410G (2-1)
NAC NO	121-16004
DRAWN	DMY
CHECKED	BLC
DATE	03/16/2018

© 2018 NAC Inc

COLD FORMED STEEL FRAMING DETAILS

S9.02

3/16/2018 1:34:43 PM C:_Revit Models\16351 WSH Kitchen Commisary R2017 (Central)_dmorford\PCS.rvt

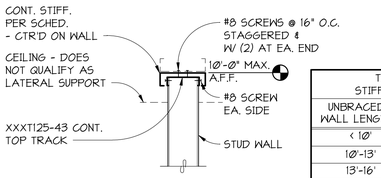

TOP OF WALL STIFFENER

TOP OF WALL STIFFENER SCHEDULE	
UNBRACED WALL LENGTH "ℓ"	STIFFENER MEMBER CONT.
< 10'	NONE REQ'D
10'-13'	600S137-33
13'-16'	(2) 600S137-33
16'-24'	(2) 800S162-43

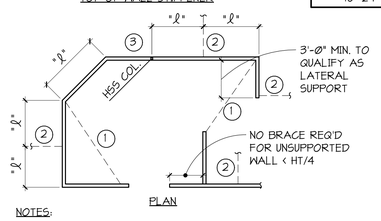

PLAN

NOTES:

1. THIS PLAN IS AN EXAMPLE ONLY. IT DOES NOT REPRESENT A SPECIFIC WALL.
2. "ℓ" INDICATES UNBRACED LENGTH OF WALLS - SEE SCHEDULE FOR TOP OF WALL STIFFENER SIZE.
3. AT CONTRACTOR'S OPTION - IN LIEU OF TOP OF WALL STIFFENER:
   - (1) INDICATES HORIZONTAL BRACE EXTENDING TO ADJACENT CORNER - SEE 3/S9.03.
   - (2) INDICATES BRACE UP TO STRUCTURE - SEE 2/S9.03.
   - (3) INDICATES WALL BRACED AT HOLLOW STRUCTURAL SECTION COLUMN - PROVIDE L2"x2"x 1/2" LESS THAN STUD WIDTH x54MIL. W/ (4) #8 SCREWS TO TOP TRACK. - WELD CONN. ANGLE TO HOLLOW STRUCTURAL SECTION COLUMN OR PROVIDE (4) POWDER ACTUATED FASTENERS AT CONTRACTOR'S OPTION.
4. ALL TOP TRACK SPLICES SHALL BE AT BRACE LOCATIONS.

TYPICAL LATERAL SUPPORT FOR COLD-FORMED STEEL STUD WALLS NOT EXTENDING TO STRUCTURE ABOVE

1 / S9.03 DETAIL
NO SCALE

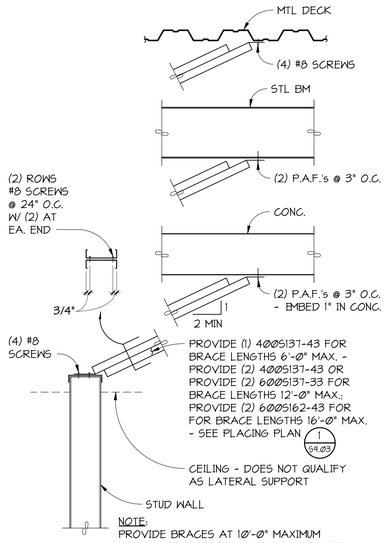

NOTE:
PROVIDE BRACES AT 10'-0" MAXIMUM FROM WALL INTERSECTIONS OR CORNERS AND AT 10'-0" ON CENTER.

TYPICAL COLD-FORMED STEEL STUD WALL BRACE UP TO STRUCTURE

2 / S9.03 DETAIL
NO SCALE

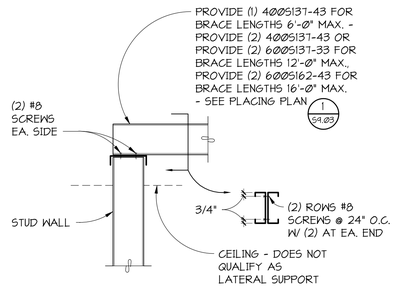

NOTE:
PROVIDE BRACES AT 10'-0" MAXIMUM FROM WALL INTERSECTIONS OR CORNERS AND AT 10'-0" ON CENTER.

TYPICAL COLD-FORMED STEEL STUD WALL HORIZONTAL BRACE

3 / S9.03 DETAIL
1" = 1'-0"

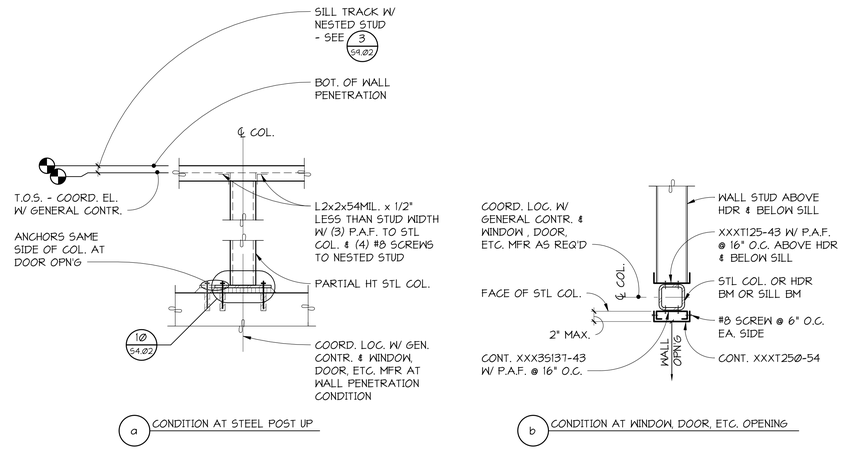

4 / S9.03 DETAIL
1" = 1'-0"

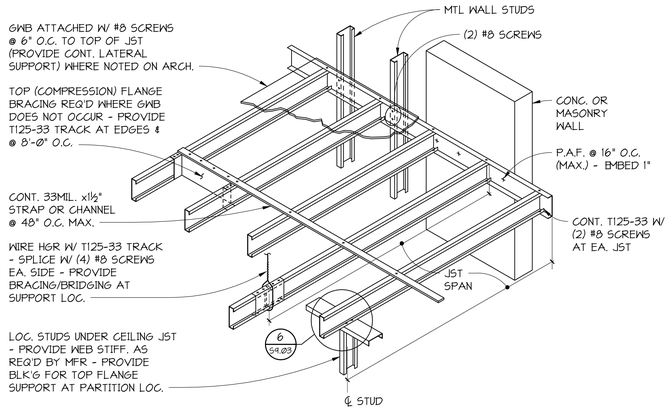

TYPICAL COLD-FORMED STEEL CEILING FRAMING DETAIL

C.F.S. JOIST CEILING FRAMING SCHEDULE 10 P.S.F. LIVE LOAD - L/240 DEFLECTION LIMIT - (2) LAYERS MAX. OF 5/8" G.W.B.												
JOIST SIZE	STUD MIL.											
	18MIL.						33MIL.					
	JOIST SPACING											
	12" O.C.		16" O.C.		24" O.C.		12" O.C.		16" O.C.		24" O.C.	
	NUMBER OF CONTINUOUS SPANS											
	ONE	TWO+	ONE	TWO+	ONE	TWO+	ONE	TWO+	ONE	TWO+	ONE	TWO+
	MAXIMUM JOIST SPAN ALLOWED											
250S	6'-9"	6'-11	5'-4"	5'-9"	-	4'-4"	8'-3"	10'-0"	7'-6"	8'-9"	6'-4"	7'-1"
362S	7'-3"	6'-8"	5'-5"	5'-3"	-	-	11'-0"	13'-3"	10'-0"	11'-6"	8'-4"	9'-4"
400S	9'-0"	6'-3"	7'-6"	4'-10"	5'-0"	-	11'-11"	14'-3"	10'-10"	12'-4"	9'-0"	9'-9"
600S	-	-	-	-	-	-	16'-6"	16'-10"	14'-9"	13'-10"	12'-0"	10'-2"

NOTES:
1. BRACE TOP FLANGE AT 48" ON CENTER MAXIMUM.
2. INFORMATION SHOWN TAKEN FROM THE GYPSUM CONSTRUCTION HAND BOOK BY CGC INCORPORATED.
3. SEE ARCHITECTURAL DRAWING FOR LATERAL SUPPORT OF SUSPENDED FRAMING.

5 / S9.03 DETAIL
1" = 1'-0"

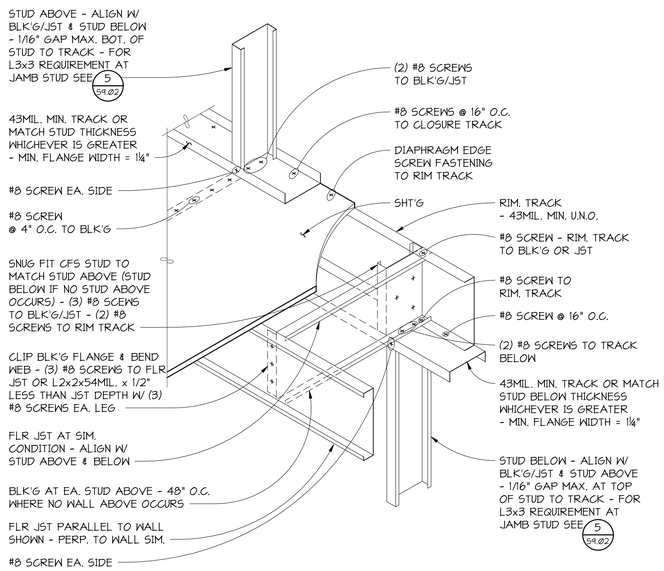

TYPICAL COLD-FORMED STEEL FLOOR TO BEARING WALL

6 / S9.03 DETAIL
NO SCALE

REVISIONS

CONFORMED SET

WESTERN STATE HOSPITAL
BUILDING 22, PATIENT SUPPORT CENTER
PATIENT SUPPORT CENTER
9601 STEILACOOM BLVD SW, LAKEWOOD, WASHINGTON 98498-7213

PCS Structural Solutions
Seattle | Tacoma | Portland
www.pcs-structural.com

NAC ARCHITECTURE
nacarchitecture.com
2025 FIRST AVE | SUITE 300
SEATTLE WA 98121
P:206.441.4522

© 2016 NAC Inc

DSHS NO	16-410G (2-1)
NAC NO	121-16004
DRAWN	DMY
CHECKED	BLC
DATE	03/16/2018

COLD FORMED STEEL FRAMING DETAILS

S9.03